POLITECNICO DI TORINO
Repository ISTITUZIONALE

ISRM Suggested Method for Determining the Abrasivity of Rock by the CERCHAR Abrasivity Test

Original
ISRM Suggested Method for Determining the Abrasivity of Rock by the CERCHAR Abrasivity Test / Alber, M.; Yaral, O.; Dahl, F.; Bruland, A.; Kasling, H.; Michalakopoulos, T. N.; Cardu, Marilena; Hagan, P.; Aydn, H.; Ozarslan, A.. - In: ROCK MECHANICS AND ROCK ENGINEERING. - ISSN 0723-2632. - STAMPA. - (2014), pp. 261-266. [10.1007/s00603-013-0518-0]

Availability:
This version is available at: 11583/2524900 since: 2016-11-20T14:57:55Z

Publisher:
Springer

Published
DOI:10.1007/s00603-013-0518-0

Terms of use:

This article is made available under terms and conditions as specified in the corresponding bibliographic description in the repository

Publisher copyright
Springer postprint/Author's Accepted Manuscript

This version of the article has been accepted for publication, after peer review (when applicable) and is subject to Springer Nature's AM terms of use, but is not the Version of Record and does not reflect post-acceptance improvements, or any corrections. The Version of Record is available online at: http://dx.doi.org/10.1007/s00603-013-0518-0

(Article begins on next page)

12 October 2024

ISRM Suggested Method for Determining the Abrasivity of Rock by the CERCHAR Abrasivity Test

Michael Alber · Olgay Yaralı · Filip Dahl · Amund Bruland · Heiko Käsling · Theodore N. Michalakopoulos · Marilena Cardu · Paul Hagan · Hamit Aydın · Ahmet Özarslan

1 Introduction

Rock abrasivity plays an important role in characterizing a rock material for excavation purposes. Abrasion can be defined as the wearing or tearing away of particles from the surface, i.e. it is a process causing removal or displacement of material at a solid surface, which will lead to wear, especially on tools that are used in mining, drilling, and tunneling applications. The CERCHAR Abrasivity Test is a method to determine an index called CERCHAR Abrasivity Index (CAI) for the rock's abrasivity.

The test was originally developed by the Laboratoire du Centre d'E´ tudes et Recherches des Charbonnages (CER-CHAR) de France for coal mining applications (Cerchar 1986). Two standards exist for this test method: the French standard AFNOR NF P 94-430-1 (2000) and ASTM D7625-10 (2010). The test is widely used in research and practice. There are essentially two designs of testing apparatus: the original design as developed at the CER-CHAR Centre (Valantin 1973) and a modified design as reported by West (1989). While the designs are similar there are some important differences as well as ambiguities in test conditions that include equipment actuation, mate-rial properties of the stylus and sample preparation as summarized by Plinninger et al. (2003).

2 Scope

The CERCHAR Abrasivity Test is intended as an index test for classifying the abrasivity of a rock material. The test measures the wear on the tip of a steel stylus having a Rockwell Hardness of HRC 55.

A rock specimen, disc-shaped or irregular, is firmly held in the test apparatus. The stylus is lowered carefully onto the rock surface. While under a normal force of 70 N, the stylus is moved a total distance of 10.0 mm across the rock.

M. Alber
Engineering Geology/Rock Engineering, Ruhr-University Bochum, 44780 Bochum, Germany

O. Yaralı · H. Aydın · A. Özarslan
Mining Engineering Department-67, Bülent Ecevit University, 100 Zonguldak, Turkey

F. Dahl · A. Bruland
Building and Infrastructure, Rock Engineering, SINTEF, 7465 Trondheim, Norway

H. Käsling
Engineering Geology, Technical University Munich, Arcisstr. 21, 80333 Munich, Germany

T. N. Michalakopoulos
Department of Mining Engineering, National Technical University of Athens, Zographou Campus, 15780 Athens, Greece

M. Cardu
Department of Environment, Land and Infrastructure Engineering, Politecnico di Torino, DITAG, 24 Corso Duca degli Abruzzi, CAP 10129 Turin, Italy

P. Hagan
School of Mining Engineering, The University of New South Wales, Sydney, Australia

The wear surface of the stylus tip is measured under a microscope to an accuracy of 0.01 mm. The CAI is a dimensionless unit value and is calculated by multiplying the wear surface stated in units of 0.01 mm by 10. For example, if the wear flat of a stylus tip was measured as being 0.25 mm, the corresponding value of CAI should be reported as 2.5.

3 Apparatus

3.1 Basic Mechanisms

There are two fundamentally different mechanisms to actuate the relative movement between the stylus and rock surface. In the original CERCHAR design, both the stylus and deadweight are made to move across the stationary rock surface. In the case of the West design, the rock samples moved under a stationary stylus. Figure 1 schematically depicts the method of actuation in the two designs. The main features in the design of the two test apparatus and the nomenclature for these apparatus are also offered. A consequence of the difference in design is a near tenfold difference in test duration between the fast lever actuation with the CERCHAR design compared to the slow screw feed actuation with the West design.

Both machines use a rigid vice to firmly clamp the rock sample. It is important to ensure that the apparatus is sufficiently stiff to minimize any lateral movement during a test. The static force of 70 N is the result of a deadweight placed on top of the stylus. The stylus should be carefully lowered onto the rock surface. The stylus should be placed normal to the surface of the rock specimen. The test duration involving displacement of the stylus by 10 mm should be completed within 1 ± 0.5 s with Type 1 apparatus and 10 ± 2 s with Type 2 apparatus.

3.2 Stylus

The stylus should be manufactured of a standard chrome–vanadium alloyed cold-work tool steel (such as Material Nr. 1.2210 as specified for example in DIN 115CrV3; AFNOR 100C3; UNI 107CrV3KU; AISI L2, respectively) tempered to the desired hardness. It is strongly recommended to employ only styli tempered to Rockwell hardness HRC 55 ± 1. Provisions for different stylus hardness are given below. As the hardness values of the steel styli achieved during heat treatment can vary, the actual hardness of each stylus must be measured and recorded on at least one occasion prior to first use. A stylus having hardness beyond the tolerance limits of HRC ± 1 must not be used. The diameter of the stylus should be at least 6 mm and its length shall be such that the visible part of the stylus between the pin chuck/guide and rock surface during a test is at least 15 mm. The tip of a stylus shall have a conical angle of 90°. A worn stylus should be re-sharpened and the

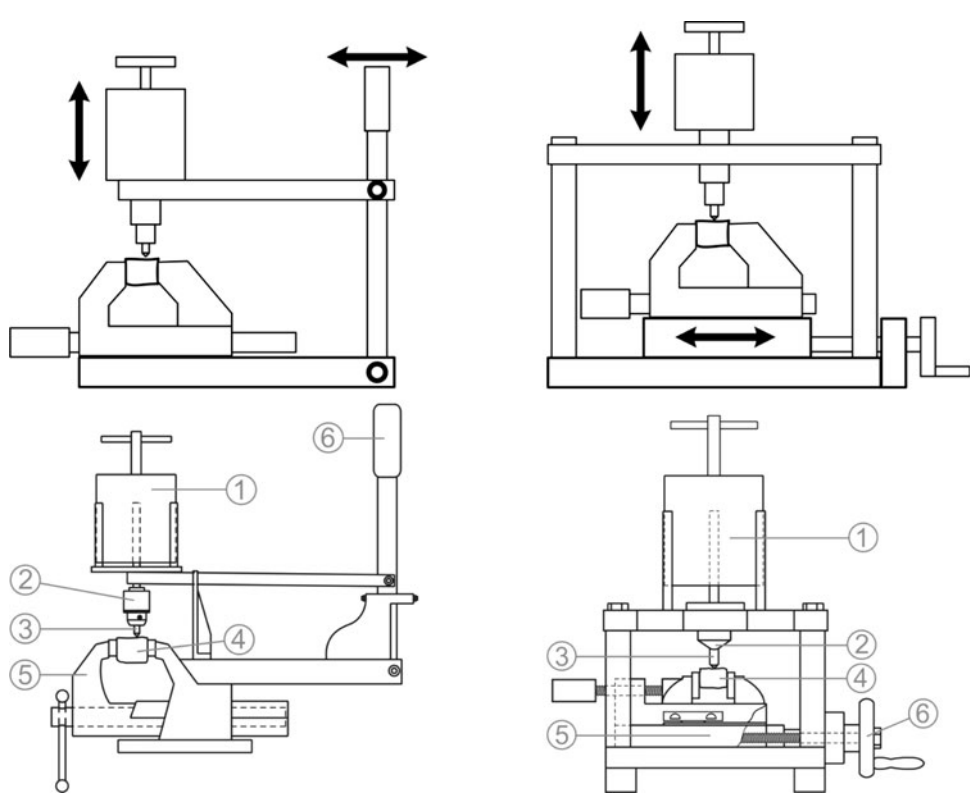

Fig. 1 Basic mechanisms as well as exemplary sketches of the two main forms of test apparatus in use. *Left* Type 1, original design CERCHAR-type testing apparatus. *Right* Type 2, the modified CERCHAR apparatus as reported by West (1989). *1* mass, *2* pin chuck/guide, *3* stylus, *4* specimen, *5* vice, *6* lever/hand crank

tip angle checked under a microscope before use in a further test.

3.3 Force

The static force acting on the stylus should be 70 N.

3.4 Grinder

Each used stylus should be re-sharpened using a standard abrasive stone wheel. The grinding wheel should have fine grit to avoid leaving rough ground surfaces at the stylus tip. The use of a suitable cooling-fluid, that will prevent any change in stylus hardness as a result grinding, is mandatory.

3.5 Test Specimen

The rock sample may be either disc-shaped or irregular in shape. Test on a fresh, fractured rock surface is recommended. Rough surfaces may be obtained by Brazilian Testing on rock discs or by firm hammer blows on a rock core or rock sample, respectively. Alternatively, sawn-cut surface may be prepared by a water-cooled diamond saw blade. The testing surface should be cleared from debris or loose grains. The specimen can either be saturated, having the natural water content, air dried or oven dried. The path of the stylus on the rock surface should be free of visible pores. There is no limitation with respect to the grain size. However, for rocks having grain size greater than 2 mm, a larger number of tests should be considered. A test path may be dominated by a large mineral grain, and therefore, five single scratches may not represent the full mineral composition of the rock specimen. The size of the rock surface should be sufficient to permit five test scratches that are at least 5 mm from the edge of the rock surface. Each test should be 5 mm apart.

Anisotropic rocks, as expressed by for example bedding, gradation, banding, schistosity, etc., should be given special attention with respect to scratch directions. Scratches perpendicular to the anisotropic feature as well as on the surface of the anisotropic feature are suggested. The location and direction of testing in any sample should be selected to represent the dominant mineralogy and texture of the rock sample observed in macroscopic samples.

4 Test Procedure

Prior to a test, the stylus should be inspected under a microscope. The apparatus should be checked for proper functionality. The sample should be clamped firmly in the vice while observing the desired scratching direction. The rock surface should be, to the extent possible, horizontal. The stylus should be carefully lowered onto the rock surface to avoid any damage to the tip of the stylus. The stylus should be positioned so it is vertical and perpendicular to the rock surface. The length of a test scratch in the rock sample must be exactly 10.0 mm. Depending on the apparatus design, the testing duration should be either 1 s with Type 1 or 10 s with Type 2 apparatus, respectively (Fig. 1). During the test there should be constant contact between the stylus and the rock surface. Otherwise, there is likely to be an erroneous result and the test must be repeated with a new stylus.

After testing, the stylus is carefully lifted from the rock surface and the stylus removed. Measurements of the tip wear flat are made as specified in Sect. 5.

A minimum of five test replications must be made on the rock surface, each time by a new or re-sharpened stylus.

5 Stylus Wear Measurement

The length or diameter of the wear flat, d, shall be based on optical and digital methods using a microscope having a minimum magnification of 25×. The measuring resolution should be at least ±-0.005 mm with readings reported to the nearest 0.01 mm. Measurements may be executed by side- or top-view settings as shown in Fig. 2.

Measurements by side view are however strongly recommended. When testing a fresh, fractured rock surface, especially in harder rock types, the wear flat can often exhibit a non-symmetrical shape with splinters or burrs of steel that stretch beyond the wear flat (as shown in Fig. 3). This can affect measurements by making it difficult to determine the true diameter of the wear flat by top-view measurements. A correct determination of the start and end points of the wear flat, as stated by Rostami et al. (2005), is crucial to the accuracy of the test which might otherwise contribute to large variations between different operators and laboratories.

The profile of the worn surface may, in some instances, make the estimation of the measurement difficult. Hence only measurements obtained from certain standard surface profiles should be used, examples of these standard profiles are shown in Fig. 4a–b. No measurement should be recorded and the test repeated in the case of any non-standard worn profile such as shown in Fig. 4c.

When using the side-view method, it is suggested the stylus should be placed in a V-notch holder or jig and four measurements shall be made each at 90° rotation. The measurements should be taken parallel and perpendicular to the direction of scratching.

Two measurements should be performed when using the top-view method as shown in Fig. 2b. When digital equipment is used, one measurement from the top will suffice (Fig. 2c).

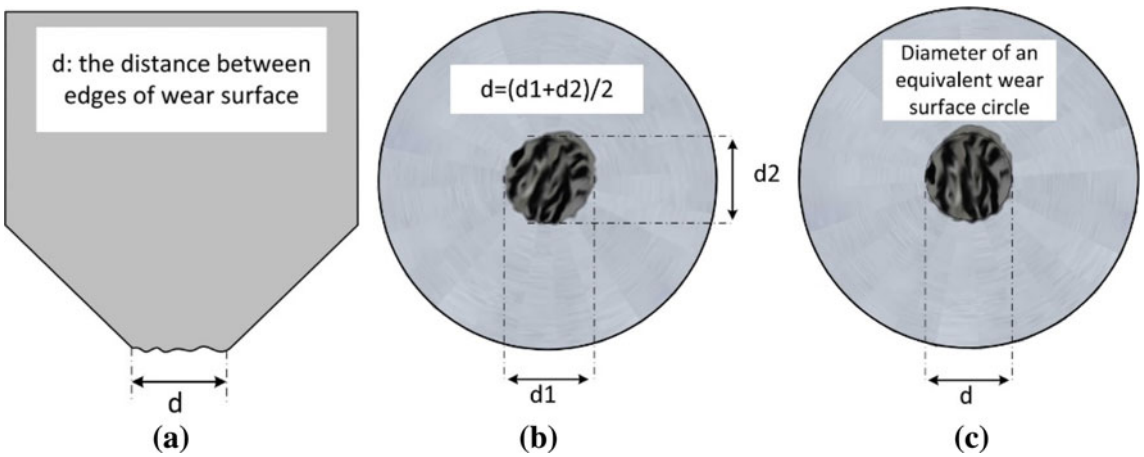

Fig. 2 Measurement by side-view (**a**) and top view (**b**, **c**). The methods shown in (**a**) and (**b**) are recommended for optical measurements and (**c**) for digital measurements

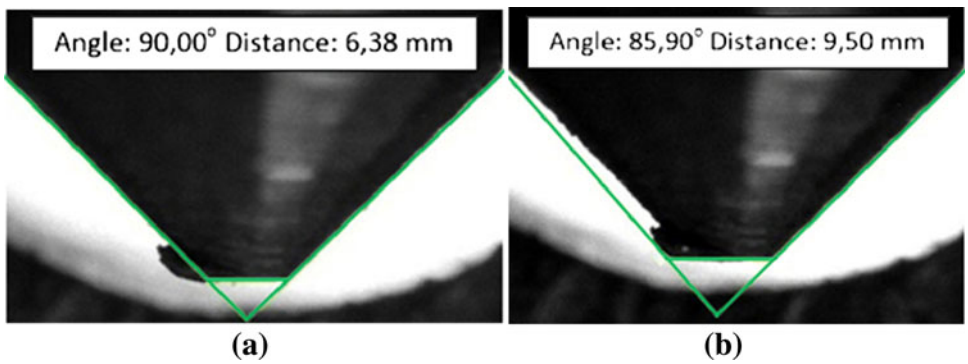

Fig. 3 Side view of a correct tip wear flat measurement (**a**) and what could be regarded as an overestimation of the wear flat by a top-view measurement method (**b**)

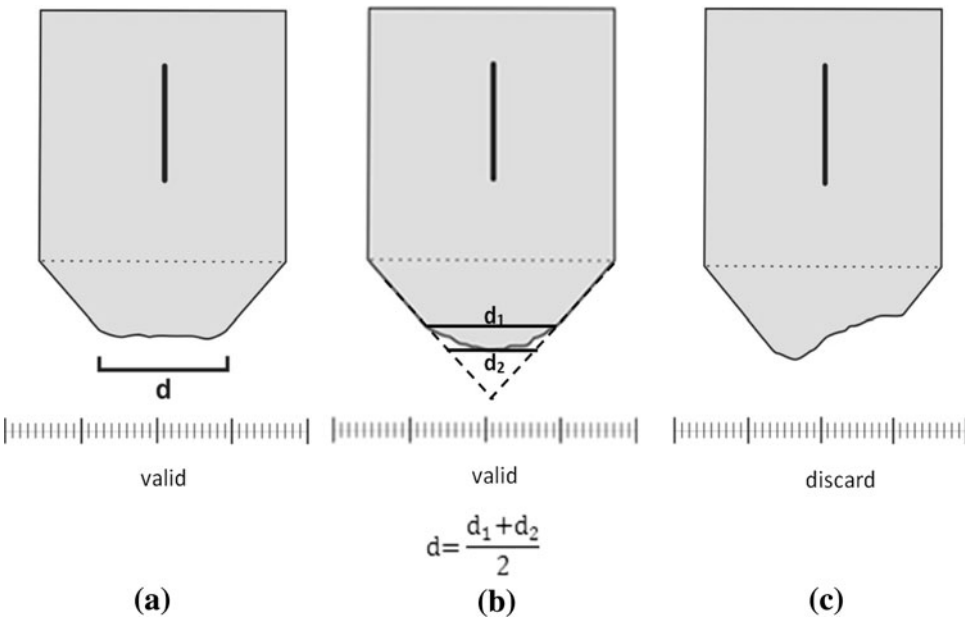

Fig. 4 Standard worn profiles (**a**, **b**) and the corresponding length of wear surface, **c** an example of a non-standard profile in which case no measurement should be recorded

Table 1 Example of CERCHAR Abrasivity testing with five test replications with four measurements of the wear flat by side view of each test pin

Test No.	1	2	3	4	5
Pin Hardness (HRC)	55	55	55	55	55
Measurement d_1 (mm)	0.40	0.42	0.42	0.40	0.39
Measurement d_2 (mm)	0.41	0.44	0.40	0.41	0.38
Measurement d_3 (mm)	0.40	0.42	0.41	0.40	0.39
Measurement d_4 (mm)	0.42	0.41	0.41	0.44	0.39
Mean reading d_M (mm)	0.41	0.42	0.41	0.41	0.39
Mean pin wear (mm)					0.41
CERCHAR-Abrasivity-Index (CAI) (–)					4.1
Standard deviation of CAI					0.11

6 Calculations

For each measurement of the wear flat, d, the CAI is calculated by the formula given in Eq. (1)

$$\mathrm{CAI} = d \times 10 \tag{1}$$

where d is the wear tip surface measured to an accuracy of 0.01 mm.

The dimensionless CAI value is reported as the arithmetic mean of five or more test replications together with the standard deviation (Table 1).

Whenever a stylus hardness other than the recommended hardness of HRC 55 ± 1 is used, the symbol notation adopted when reporting the CAI shall be $\mathrm{CAI}_{(x)}$, where the subscript x denotes the value of hardness in units of Rock-well hardness HRC. The symbol CAI shall only apply to ''as measured'' values of wear flat on a stylus having a hardness of HRC 55 ± 1. Values for the CAI using a stylus hardness other than HRC 55 can be converted using the method as suggested by Michalakopoulos et al. (2006) or Jacobs and Hagan (2009), the latter been shown below.

If the length or diameter of wear flat on a stylus of a given hardness is known then the equivalent calculated value of CAI or CAI′ at the standard stylus hardness of HRC 55 can be calculated as follows (Jacobs and Hagan 2009)

$$\mathrm{CAI}' = 0.415\ \mathrm{CAI}_{(x)}/(1 - 0.0107x) \tag{2}$$

where $\mathrm{CAI}_{(x)}$ is measured as the value of CAI using a stylus having a hardness of HRC x.

7 Tests on Sawn-Cut Surfaces

In special cases, the CERCHAR test may be executed on a saw-cut rock surface. The influence of a saw-cut surface on the CAI′ value may be accounted for by correcting the wear tip flat length, d_s, from test on saw-cut surface using Eq. 3 after Ka¨sling and Thuro (2010):

$$d = 1.14\, d_s \tag{3}$$

Equation (3) should not be used for hard and very highly abrasive rocks.

Table 2 Classification of CAI

Mean CAI	Classification
0.1–0.4	Extremely low
0.5–0.9	Very low
1.0–1.9	Low
2.0–2.9	Medium
3.0–3.9	High
4.0–4.9	Very high
≥5	Extremely high

8 Classification

The abrasivity classification system is given in Table 2. This classification system is based on the ''as measured'' CAI or equivalent calculated CAI′ based on stylus having a Rockwell Hardness HRC 55 and a rough rock surface. The classification system must not be used for other values of stylus hardness.

9 Reporting

A report on a CERCHAR test shall include the following information:

(a) Source of sample(s), sampling date, method of preserving sample(s) during transport
(b) Testing date
(c) Storage/testing environment (saturated, as received, air dried, oven dried)
(d) Rock type (if known)
(e) Maximum grain size
(f) Planes of weakness or anisotropy (bedding, schistosity, etc.)
(g) Direction of scratching with respect to planes of weakness or anisotropy
(h) Surface condition (rough, saw-cut)
(i) Rockwell hardness HRC of stylus
(j) Type of apparatus (Type 1, Type 2)
(k) Measurement method (side view, top view, optical, digital)
(l) Each "as measured" value of CAI, mean and standard deviation, and where appropriate the equivalent values for CAI′ (Table 1)
(m) Classification based on criteria shown in Table 2.

Acknowledgments A 3-day workshop of the WG members at Bülent Ecevit University, Zonguldak, Turkey was made possible by financial support of the Bülent Ecevit University, Zonguldak, Turkey and TUBITAK (The Scientific and Technological Research Council of Turkey) Grant No. 110M579. Input from H. Copur (Technical University Istanbul, Turkey) is gratefully acknowledged. We acknowledge the useful and constructive comments of the reviewers Prof. Bilgin (Istanbul Technical Univerity, Turkey), Prof. Nilsen (NTNU Trondheim, Norway), Prof. Thuro (Technical University Munich, Germany), Dr. Plinninger (Dr. Plinninger Geotechnik, Bernried, Germany) and Prof. Rostami (Pennsylvania State University, USA).

References

AFNOR (2000) Détermination du pouvoir abrasif d'une roche—Partie 1: Essai de rayure avec une pointe (NF P 94-430-1), Paris

ASTM (2010) Standard test method for laboratory determination of abrasiveness of rock using the CERCHAR method. Designation: D7625-10

Cerchar—Centre d'Études et des Recherches des Charbonnages de France (1986) The Cerchar abrasivity index. Verneuil

Jacobs N, Hagan P (2009) The effect of stylus hardness and some test parameters on the Cerchar Abrasivity Index. In: Proceedings of 43rd US rock mechanics symposium, June 28–July 1, Asheville, NC, USA

Käsling H, Thuro K (2010) Determining rock abrasivity in the laboratory. In: Zhao, Labiouse, Dudt, Mathier (eds) Rock mechanics in civil and environmental engineering—Proc EUROCK 2010. Taylor & Francis, London, pp 425–428

Michalakopoulos TN, Anagnostou VG, Bassanou ME, Panagiotou GN (2006) The influence of steel styli hardness on Cerchar abrasiveness index value. Int J Rock Mech Min Sci 43:321–327

Plinninger R, Käsling H, Thuro K, Spaun G (2003) Testing conditions and geomechanical properties influencing the Cerchar abrasiveness index (CAI) value. Int J Rock Mech Min Sci 40:259–263

Rostami J, Özdemir L, Bruland A, Dahl F (2005) Review of issues related to Cerchar abrasivity testing and their implications on geotechnical investigations and cutter cost estimates. In: Rapid Excavation and Tunnelling Conference, Seattle, WA, USA. pp 15–29

Valantin A (1973) Examen des différents procédés classiques de détermination de la nocivité des roches vis-à-vis de l'abattage mécanique. Expose Presenté Aux Journées d'information Techniques de Creusement, les 28–29 Novembre 1973, Luxemburg, pp 133–140

West G (1989) Rock abrasiveness testing for tunnelling. Int J Rock Mech Min Sci 26:151–160