POLITECNICO DI TORINO
Repository ISTITUZIONALE

Implementing a New Approachfor the Design of an E-LearningPlatform in EngineeringEducation

Original
Implementing a New Approachfor the Design of an E-LearningPlatform in EngineeringEducation / Violante, MARIA GRAZIA; Vezzetti, Enrico. - In: COMPUTER APPLICATIONS IN ENGINEERING EDUCATION. - ISSN 1061-3773. - (2012). [10.1002/cae.21564]

Availability:
This version is available at: 11583/2497118 since:

Publisher:
Wiley

Published
DOI:10.1002/cae.21564

Terms of use:

This article is made available under terms and conditions as specified in the corresponding bibliographic description in the repository

Publisher copyright

(Article begins on next page)

12 October 2024

Implementing a new approach for designing an e-learning platform in Engineering Education

E.Vezzetti, M. Violante

Dipartimento di Ingegneria Gestionale e della Produzione, Politecnico di Torino, Corso Duca degli Abruzzi 24, 10129,Torino, Italy

Tel.: +39 011 5647294; Fax: +39 011 5647299

Abstract

Modern corporations, institutions, universities and schools in developed countries consider e-education as a way to educate larger groups of students in less time and reducing the use of various resources.

Since setting up a web-system for e-education takes significant amount of time as well as computer and other resources, assessment of goals and desired effects of the online system should be done in the preparation phase.

It is important to highlight that only putting course content on the web, without using appropriate pedagogical models and principles, as well as without sufficient share of appropriate communication types between participants and with the instructor and use of modern information technologies to present the formative contents is not enough to fulfill the educational goals. It should be noted that, after substantial initial investment and excitement about the possibilities of e-education, there are many sources of difficulties and dissatisfaction of the online instruction or course participants.

Most e-learning studies are centered around propositions of possible improvement in course materials with a little attempt to explore the learners' dimension, context, pedagogic considerations and technology dimension

In this paper we analyze the aspects to consider for designing an e-learning platform in engineering education and we propose a methodology, based QFD approach, useful into the preparation phase of distance learning systems. Finally we explain the impact of new information technologies (WEB3D technologies) on online engineering education and we highlight how these tools have been implemented in our developed e-learning platforms in mechanical education.

Keywords

Distance education; Technology Integration/Innovation; interactive learning environments; lifelong learning; pedagogical issues; engineering education

Introduction

E-Learning has been described as the use of telecommunication technology to deliver, support and enhance teaching and learning.

Due to the rapid growth of Internet, web-based learning (WBL), Computer Based Training (CBT), computer assisted learning (CAL), computer based instruction (CBI) distance education, distance learning and e-learning are becoming synonymous (Tao, Guo & Lu, 2006)

In over a century, distance education evolved from correspondence study, open universities, teleconferencing, networks and multimedia delivery to today's Web-based technologies (Passerini & Granger, 2000).

With the progress of information and communication technology development, e-Learning emerges as the paradigm of modern education.

E-Learning is basically a web-based system that makes information or knowledge available to users or learners and disregards time restrictions or geographic proximity, permits liberating interactions between learners and instructors, or learners and learners (Sun, Tsa., Finger, Chen & Yeh, 2008)

The development of online educational system for a university course, seminar or corporate training has been justified by several reasons:

- It is easier for a large number of participants to successfully and more completely acquire instructional content;
- decreased expenses and waste of time of the students for traveling to the class venue;
- better impression of the teacher/instructor and the institution which organized the instruction;
- available financial resources which make the time and effort financially worthwhile;
- a chance to master new educational technologies and join the contemporary trends.
- evaluate the profitability of investing into e-education.

As Andrade, Ares, Rodrıguez, Seoane & Suarez (2008) state, the market targeted by Web Based Learning WBL has been variously defined to include the following groups:

- working adults who do not have the desire or resources to attend on-campus programs,
- adults in jobs where their employers (e.g., the high technology sector) cannot afford to provide long leaves of absence,
- adults in Third World countries or isolated communities who do not otherwise have access to brick and mortar institutions,
- single parents or economically disadvantaged adults who have to work full time,
- working adults who travel too much to attend regular programs,
- undergraduate students who need or want an alternative to on-campus programs for economic, social, personal, or practical reasons.

The article is organized in different sections. First section considers the aspects to take into consideration to set a web-system for e-education. Second section describes a methodology useful

into the preparation of an online instructional module and that illustrates the effectiveness of the web3D technologies in the creation of e-learning system.

Third section illustrates our developed e-learning platforms and describes the implementation of the Web3D techniques in our e-learning systems.

Factors to consider for designing e-learning platforms in engineering education

Sun et al. (2008) and Piccoli et al. (2001) state although online learning has advantages over traditional face-to-face education, the costly high failure rate of e-Learning success deserves attention already from the preparation phase.

Web-based learning differs from conventional learning in which it is student-centered, knowledge-centered, assessment-centered, and community-centered (Lowyck & Pöysä, 2001). Web-based learning environments have transformed the roles of instructors, students, and course materials so much that a new relationship has emerged between these three actors/elements of learning (Fu et al. 2009).

In order to design an e-Learning system in engineering education and to improve and stimulate the process of knowledge acquisition in an e-learning context, our study has sought:

- to indicate the final users and benefactors of distance learning modules in engineering education;
- to gain deeper understanding of the learning theories, the communication tools and technology dimension;
- as well as to decide which pedagogical approach and information and communication technology are to be employed.

Final users and benefactors of e-Learning systems in Engineering Education

E-learning's characteristics fulfill the requirements for learning in a modern society and have created great demand for e-Learning from businesses and institutes of higher education (Sun et al.,2008).

Andrade et al. (2008) and Rosenberg (2000) state that e-Learning is mainly focused on two student profiles (a) traditional pupils (i.e., people acquiring knowledge and abilities prior to the start of their professional life) and (b) workers that have to acquire new knowledge or improve the knowledge they already possess in order to keep up with their job requirements (i.e., lifelong learning).

Irrelevance of the location where the course takes place and inexistence of the restrictions associated to a traditional timetable are the most important advantages provided by e-learning.

The flexibility of time, place and programs offered via Web training is appealing to pupils who are trying to balance school with work and home responsibilities. They can mix modes of instruction, even accumulating college credits and meeting residency requirements for degrees.

Employees who seek flexible work hours and telecommuting work arrangements are being drawn to companies that offer similar opportunities for them to upgrade their skills.

The word of the school

The last decade has been witness to significant change across broad areas of our physical, social and cultural systems.

Education has also had to accommodate change reflected in an ever-growing student population, which occupy places on existing or newly developed courses covering a very broad range of subject areas. The ramifications of these changes are increasing the student/staff ration, reduction in student contact hours which, if conventional educational practices persist, would lead to a diminishing quality in the learning experience offered (Parkinson & Hudson, 2002).

Such pressures on the educational system are clearly reflected in the growth and development of computer technology with applications in diverse areas such as engineering education.

Day & Suri (1999) affirm the engineer' knowledge is allowed to develop the knowledge bases through wider associated reading, incorporating supplementary ideas to lend a broader perspective, while maintaining the course syllabus. Developing a set of knowledge bases through rigid reference to one mandatory textbook or from course notes alone may result in a narrow system of limited educational value, while also making the job of the knowledge engineer more difficult and less interesting.

In addition in technical and vocational education, practice is very important subject beside theoretical education. Most of the lecturers in technical education institutions all around the world were agreed that learning by practicing is more retention than learning by reading (Azaklar & Korkmaz, 2008). Practical experience is essential in engineering education as it helps to balance the theoretical and practical contents as they encourage active learning. The main function of engineering profession is to manipulate materials, energy and information; thereby creating benefit for humankind (Azaklar et al. 2008, Daugherty J.L. & Custer R.L. 2010) ''Doing'' is the key in engineering profession. Students can gain theoretical knowledge in the classroom but it is only possible to grasp necessary practical knowledge and experiences in the laboratory.

Since for an engineer it is important to have to go beyond the theoretical knowledge because in application-based education, it requires not only conceptual understanding, it needs practical

knowledge. For these reasons, thus, there are two distinct learning environments in engineering education (classroom and laboratory).

In addition, if the number of students in a class is more than the number of seats in a lab or if there is not enough equipments and devices for individual use of each student in a limited period to complete all the procedures, this causes some problems. Then practicing inadequately causes grow of inexperienced young generation with the lack of scientific skills and knowledge (Azaklar et al., 2008, Ammeret Rossouw, Hacker M. & J. de Vries M., 2010).

As an effort to make an innovation in the engineering education and overcome all the illustrated difficulties, our aim sets out to design, implement and successfully provide an e-learning system in some courses of the engineering education such as mechanical engineering.

The word of the work

Education and training via the World Wide Web are growing rapidly. Reduced training costs, world-wide accessibility and improved technological capabilities have made electronic instructional delivery to adult learners a viable alternative to classroom instruction (Brown, 2000).

Brown (2000) and Cole- Gomolski (1999) state by switching from classroom to Web-based training, some companies have realized up to 75 percent savings in their training budgets, making this mode of training especially appealing to companies that have large numbers of employees to train. Travel expenses, instructor fees, facility costs, materials, and office equipment costs, in addition to the cost of lost time on the job when employees are in training represents some of the savings that are realized through Web-based training.

Driscoll (1999) states companies with a better understanding of the potential of Web-based training are motivated by more than tactical reasons. They understand how this new technology helps them to compete in global markets and deal with shorter time horizons for product development and launch.

One of the most compelling reasons for putting training online is the ability to track employees' enrollment and test scores. Web-based training offers tools that link the learner's records to his or her personnel file. These systems not only take advantage of the existing infrastructure, but they help with workforce planning, performance reviews, and documentation for legal purposes.

Substantial savings take place by eliminating traditional media such as manuals and self-paced workbooks. Organizations that utilize web-based training do not have to print and distribute hundreds of copies of paper-based materials. This also allows for eliminating the costs associated with writing-off obsolete material. Web-based training programs are updated easily, by placing a new file on the server.

Companies that have spent thousands of dollars on personal computers, networks, and servers identified Web-based training as yet another application that justifies the organization's spending on technical infrastructure.

Taking all these considerations into account, our aim sets out to provide education and training for a specific group of learners: employees of small and medium sized enterprises (SMEs) in the sector of CAD/CAE/RE. SMEs are a vital part of the European economy and they face a number of problems in maintaining and developing the skills of their employees. They are characterized by having small training budgets and limited release time, making it difficult for staff to study full-time or on block-release courses away from the workplace [(Nickerson, Corter, Esche & Chassapis, 2007), (Sun & Cheng, 2005)].

SMEs could improve their organizational effectiveness by updating the skills of their workforce and SME employees could embark on personalized training programs, gain recognized certifications and facilitate their collaboration in the development of new more complex and competitive products.

Communication tools

Reference center for teaching methods and communication in e-education (Accessed 23.04.2010) describes the process of learning in the academic environment. It is not only related to individual efforts in acquisition of knowledge and skills, but it is also based on social interaction between the users and the instructor, as well as the users themselves.

That is why, in order for an educational process to be successful, it is not enough for the participants of online courses to only receive the information available in the literature and electronic sources, but to get help and support in acquiring the educational content through the communication with the instructor, as well as feedback about their success and way of work.

In distance education, technology provides a basis for different types of communication, categorized as asynchronous or synchronous (Negash & Whitman, 2008), (Seng & Al-Hawamdeh, 2001)-

Asynchronous communication is communication that is “time-delayed or time-deferred computer mediated mode of delivery”. In an asynchronous environment, the sender and receiver do not have to be present at the same time for communications to occur. Asynchronous types of communication are: forums, e-mail, discussion boards.

Synchronous (real-time) communication is communication that takes place concurrently. In a synchronous environment, the sender and receiver have to be present at the same time in order for

communication to take place. Examples of the mode of delivery in synchronous communication are audio/video conferencing, chat, shared whiteboard, instant messaging.

When planning an online educational system the possibility of using several separate communication channels should be taken into consideration because:

- individual participants may prefer or avoid a certain communication channel, e.g. some people prefer to use a more private communication through e-mail than through public discussion forums;
- sometimes the participants may need urgent information or help, e.g. if they cannot do or understand something related to the use of the online system, the assignments etc.;
- some messages are hard to convey or understand properly without face-to-face communication, i.e. using videoconferences or video records of the instructor's/lecturer's presentation.

ICT dimension

For the reference center for teaching methods and communication in e-education (2010), the e-education content is typically digitalized and online in order to be available to participants on any location and at any time over the Internet. However, in distance education the lecturer/instructor cannot additionally activate the participants with their presentation, the timbre and pitch of their voice, movement and gestures, or by monitoring the attention and motivation of the participants or two-way interaction. Also, providing real-time and face-to-face help to students is often not possible.

For these reasons the educational content for e-education should be prepared based on the following principles :

- the texts should be interesting and useful with examples, case studies, short exercises, games and quizzes;
- technical and expert content should be clear with sufficient previous explanation of the less familiar and new notions;
- the complex content should be visualized by using graphs, schemas, models, flow diagrams etc;
- the content should be divided into chunks which better suit the computer medium (content displayed on the screen);
- interactivity should be supported in working with the content "chunks" and other pedagogical elements;

- clear distribution and organization of the content (hierarchy, grids etc.) and the interrelations of the content elements;
- use animations, simulations, sound and video , as well as video records of lectures.

Content presentation in e-education is influenced by available technologies and their different technological capabilities. Positive effects of their use are drawing the participants' attention, greater level of interest, motivation and satisfaction of the participants, a better understanding of the content and a more efficient learning of new notions and better memorizing of the content as well as the possibility to apply the acquired knowledge in new situations.

Correlation between Learning theories and ICT

Learning is an individual activity which results in acquisition of certain knowledge, skills and habits. Different learning theories describe how people and animals learn, thereby helping us understand the inherently complex process of learning.

There are different categories or philosophical frameworks under which learning theories fall: behaviorism, cognitivism, and constructivism.

Different learning theories have also been developed for more specific purposes such as andragogy theory to help adults learn and multimedia learning theory to effective use of multimedia in learning.

In our paper in order to take advantage of modern technologies and new media, we have investigated learning mechanisms utilized by the human cognitive apparatus and other issues from the cognitive sciences.

Ronchi (2008) illustrates two methods of acquiring, elaborating and communicating knowledge defined by cognitive psychology:

- *The symbolic – reconstructive* method involves decoding symbols (language) and then mentally "rebuilding" the transmitted concept.
- *The perceptive-motory method* involves watching, touching, testing and then imitating or retesting in other words "learning by doing".

The *symbolic – reconstructive* method is well known to everybody and is associated with learning processes such as reading, interpreting, understanding, reflecting, reasoning, induction, deduction and involves processing information, being aware and conscious.

The second method is not as obvious as the first, even though it is familiar. People use this approach when learn a skill for example.

This primary mechanism of perception (visual, tactile, kina esthetic) is embedded in human beings and some other animals. Objects and the environment are perceived by watching and touching them and, above all, by noting the resulting reactions and behavior.

This second method is really the primary mechanism from a biological and psychological point of view (phylogenetic). It is the method embedded in the human organism and it is the method by which the child initially experiences and learns until the child artificially develops the symbolic-reconstructive method. The perceptive-motory mechanism is without doubt the one that has been around the longest and is the one that becomes the most well-developed over the course of our lifetimes and this sense, the most powerful.

The only limit to this mechanism (although it is an important one) is that people can only apply it to visible and tangible objects such as objects that exist physically.

We think that interactive Web3D technologies represent, in this context, the tools that allow to directly connect the perceptive –motory system to nonphysical objects- virtual digital objects.

With virtual technology we can for example materialize a mathematical space, overcome the difficulty of the learners in reading mechanical drawings and the need of mental capability, spatial vision and physical coordination required by mechanical drawing, demonstrate engineering design concepts et so on.

In fact we can touch a mechanical object and modify its structure and we can explore its mechanism from the inside.

These technologies enable the creation of a virtual world, including the ability to animate objects. This enables users to navigate around the virtual environment, move in three dimensions, interact with objects, look behind or under them and examine them from different viewpoints, as if they were in the physical world.

3D approaches try to create visualizations that are closer to real-world metaphors: the user is able to rotate and move 3D objects and navigate inside a 3D world (Teyseyre & Tandil, 2009; Park J., Kim D-E. & Sohn MH., 2010, Alaoutinen S., Heikkinen K. & Porrai J., 2010). These tools have to provide not only effective visual representations but also effective interaction styles to ease the exploration.

QFD Methodology

E-education systems contain numerous visualizations, simulations, different interactive elements, tests, quizzes, forums, mailing lists and other forms of information presentation and communication with the participants, so investments into the preparation of an online instructional module are usually greater than they are for traditional offline instruction.

In order to facilitate the preparation phase of online instructional module we have proposed a methodology that uses the Quality Function Deployment approach and that takes into account the aspects previously described (Prieto, Redarce, Lepage & Boulanger, 2002). Even if QFD is normally adopted to define which are the most important technical parameters that should characterize the development of a new product (Kogure & Akao, 1983), this section employs the QFD with the aim to select which are the most important tools characterizing the learning to achieve the maximum knowledge transfer.

Quality Function Deployment is a team-based technique that provides a means of identifying and translating customer requirements into technical specifications for product planning, design, process, and production (Calignano, Moos, Tornincasa & Vezzetti, 2008). The term Quality Function Deployment is a loose translation from the Japanese name for this methodology, hin shitsu (quality), ki nou (function), ten kai (deployment). The methodology consists of a structured procedure that starts with the qualities desired by the customer, leads through the functions required to provide these products and/or services, and identifies the means for deploying the available resources to best provide these products and/or services.

Research has found that QFD can provide some short-term benefits such as reducing the cross-functional barriers associated with product development teams and aiding changes in corporate culture. However, over the long-term, QFD has been shown to address the more tangible benefits of reduced cycle time, reduced development cost and increased productivity. An important benefit of QFD has been its effectiveness in capturing, prioritizing and stabilizing customer requirements. As with many business practices, the manner in which QFD is implemented will likely have a significant impact on the benefits derived. Team commitment to the methodology is an important success factor [(Guinta & Praizler, 1993), (Griffin, 1992)].

The first step of the QFD method is based on the identification of the ***needs*** “Raw Data”, identified in our table by pedagogical criteria, “world of work” requirements (from industrial sector) and “world of school” requirements (from university, vocational school, etc). This information has been collected with a series of interviews carried on a sample of engineering people, in particular students, teachers and employees that employ 3D CAD/CAE/ RE tools in their studies or in their normal working activity. In the first step the interviewer gives to the interviewed person the possibility to explain, without specific questions, which are his/her most important needs to teach or to learn.

It is necessary to express a relative importance for every different need, employing a scale from 1 to 5. Using the relative importance value d_i, expressed over every need, it is possible to create an organized importance list, like the one shown in table 1.

Table 1. Needs and Tools of QFD method

		TOOLS	
NEEDS	Pedagogical criteria	tools for learning	tools for communication
	World of School (university, vocational school, etc)		
	World of Work (industrial sector)		

The second step is the definition of the most important ***tools*** characterizing the learning and the communication indicated in the columns of the table 1.

Once defined all the needs and all the tools, it is necessary to define which correlation level exists between tools and needs. This means to understand which of the tools could fit better the needs. Employing three different values: 9, 3, 1, this table have been evaluated by academic personnel of academic staff of different universities involved in the project, that suggested the correlation level $r_{i,j}$ that every tools could have with the needs listed.

Managing the collected data it has been possible to define an average correlation matrix.

The final step of the QFD approach could be developed with the evaluation of the absolute importance level w_j inside the tools and the relative one w_j* , in order to show the most important features required as learning tools and communication tools. This final information could be obtained following the Independent Scoring Method (Urban & Hauser, 1993) as a combination between the correlation $r_{i,j}$ between the needs, the tools and the relative importance of the specific need d_i:

$$w_j = \sum_{i=1}^{n} d_i r_{ij} \qquad (1)$$

$$w_j^* = w_j / \sum_{j=1}^{m} w_j \qquad (2)$$

where n is the needs number and m is the tools number. The results of our analysis (see table 2) are shown in the last row of the table and show that the most suitable learning tools for on-line mechanical education are the virtual reality and simulations and Web3d technologies.

Table 2 - The results of the analysis

			tools for the learning						
		d_i	Diversity in assessment and assessment methodology	Use of virtual reality and simulations	Use of 3d technologies	Collections of problems and exercises	Collection of theoretical notes	Videos, mp3s, scanned images, links to other web sites or animations	Wikis
Pedagogical needs	Need of direct immersion in a problem or situation	4		9	9				
	To avoid to have passive students and to fall into an objectivist mode of instruction in which there is simply a transfer of information from the lecturer to the learner	4		9	9			3	3
	To lower learner anxiety due to the teacher in the face-face lessons	3		9	9			3	3
	To enhance student motivation and engagement	4		9	9			3	3
	To overcome the need of computer skills, mental capability, spatial vision and physical coordination required by the design (for example)	5		9	9			3	
	To demonstrate engineering design concepts	5		9	9			3	
	To overcome the difficulty of the learners in reading drawings	5		9	9			3	
	To put the stress on specific issues that we find particularly hard to assimilate by the students	4		9	9		9	3	
	To promote the notion of constructionist learning, where a student learns from his or her own experiences, resulting in a student-centred learning environment	5		9	9			3	3
	Need of learning by doing	5		9	9				

	To promote the experiential learning theory that defines learning as ‘‘the process whereby knowledge is created through the transformation of experience”	5		9	9				
	To develop the ability to solve problems that represent different (more or less complex) situations oriented to development of products	5			9	9		3	
	To facilitate the knowledge building	4	3	9	9	9	9	9	9
	To show dynamically many situations and concepts that are often difficult to apprehend by the learners	5		9	9			9	3
	To provide tools for structuring and coordinating the learning activity	4	3	3	3	3	3	3	3
	Need of asynchronous and synchronous learning tools	4		9	9	9	9	9	9
	Easy of use of the learning tools	5		9	9		9	9	3
	To overcome the learner computer anxiety	3		9	9			3	
	To facilitate the learner attitude toward computers	3		9	9				
	To allow creativity within a rich media environment	4		9	9			3	
	To increase a sense of shared presence	2							
	To accommodate learning preferences	3	9	9	9	9	9	9	9
	Need of a complementary balance between training and theoretical information	3		9	9	9	9		
	To improve and stimulate the process of knowledge acquisition in an e-learning context	4		9	9			9	3
Engineering education needs	To offer a valid support to the first level courses followed by a large number of students	4	9	9	9	9	9	9	
	To offer alternative solutions to the laboratory replication in the large courses	4		9	9				
	To avoid laboratory accidents during the practical sessions	4		9	9				
	To avoid the using of expensive devices (for example RE devices) by the learners with the possibility of damages	3		9	9				

Need of more hours to practice during the course	3		9	9				
To overcome the problem of large number of students per practice groups	4		9	9				
To avoid dedicated classroom (for example CAD laboratories)	3		9	9				
To avoid additional dedication by the teacher to prepare the practical classes	2		9	9			3	
To avoid to not have enough computers for the practical classes	2	9	9	9			3	
To avoid additional time employed by the teacher to correct the practical classes	2	9	3	3				
To help many of the students who cannot attend the course for short periods of time	3	9	9	9	9	9	9	
To help many of the students who work and study at the same time and cannot attend all lessons	3	9	9	9	9	9	9	
Need of practical exercises to correct continuously, for example, weekly	3	9	3	3				
Need of an end of year work to assess	3	9	3	3				
Need of a final examination to assess	3	9	3	3				
Importance of the practical exercises in the students' final results (many of the practical exercises carried out by the students during the course form part of their final marks for the subject) (continuous monitoring for assessment)	2	9	3	3				
Need of graduating the increase in the difficulty offered by the exercises	3	9	3	3	9			
To prevent the copying among students during the assessment or the practical classes	3	9	9	9				
To be a complement to the classroom lessons	3		9	9	3	9	9	3
To facilitate the interaction with their teachers and other students to ask questions in order to clarify specific aspects of the tasks they are performing	2		9	9				
To allow the students to carry out a pre-training activity outside the laboratory and possibly at home	3		9	9			3	

	Inexistence of the restrictions associated to a traditional timetable	2							
	To reduce the massive and qualified assistance required by the large number of students (first level courses) who enter the laboratory	4		9	9				
	Wj		330	1293	1338	309	336	516	210
	W*j%		7,6	29,8	30,9	7,1	7,8	11,9	4,8

As regards the communication tools, it has been highlighted that generally all types of asynchronous and synchronous communication tools are almost equally preferred and useful to improve the learning process with a weakly preference to synchronous communication tools.

Results

WEB 3D technologies: implementation

Taking in account the results of the illustrated QFD approach, this paper points up the effectiveness of the Web3D technologies in the field of the mechanical education to visualize and interact with objects in three dimensions and highlights how these tools have been implemented in two e-learning systems: the WEBD platform and 3DWebEPL platform.

Our first effort was the international pilot-project called Web based training and learning in the field of engineering and biomedical design (WEBD). It was deployed through the Leonardo da Vinci frame and it had as main objective the development of a platform-independent prototype to describe three-dimensional interactive virtual worlds linked to the World Wide Web and using Web3D technologies (Fig.1).

We had introduced and promoted, for the first time in Europe, the third dimension in the distance learning [(Tornincasa & Vezzetti, 2003), (Tornincasa & Vezzetti, 2004), (Vezzetti & Violante, 2003).

Fig.1 The WEBD platform

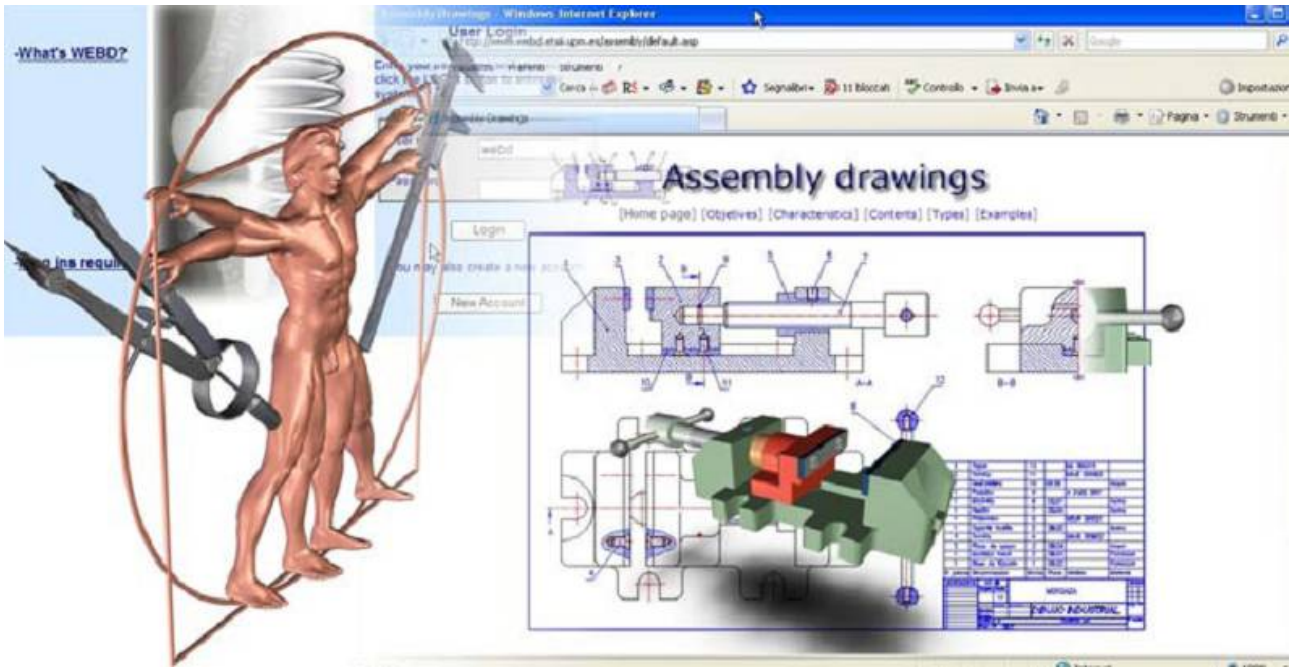

The following project was the Leonardo Multilateral Projects 'Transfer of innovation' 3D Web-based learning and training in the field of the Enterprise Product Lifecycle (3DWebEPL) (Fig.2). It had the aim to transfer and to adapt the 3D innovative contents and results from previous Leonardo WEBD project to meet the requirements of the industrial sectors above all small and medium sized enterprises (SME), Vocational Education and Training systems, universities particularly of the mechanical field [(Moos, Tornincasa, Vezzetti, Violante & Zompi, 2009), (Bonisoli, Moos, Tornincasa, Vezzetti & Violante 2009), (Moos, Tornincasa , Vezzetti, Zompi & Violante, 2009)].

3DWebEPL e-learning system is based on a Moodle platform (http://www.gig.etsii.upm.es/moodle). Platform contains different theoretical and practical lessons in English, Italian, Spanish, Turkish and Romanian (courses about CAD/CAE/RE, Kinematic Analysis of Multibody Systems, Dynamic Analysis of Multibody Systems, Virtual Reality (VR) and Digital Mock-Up and medical devices).

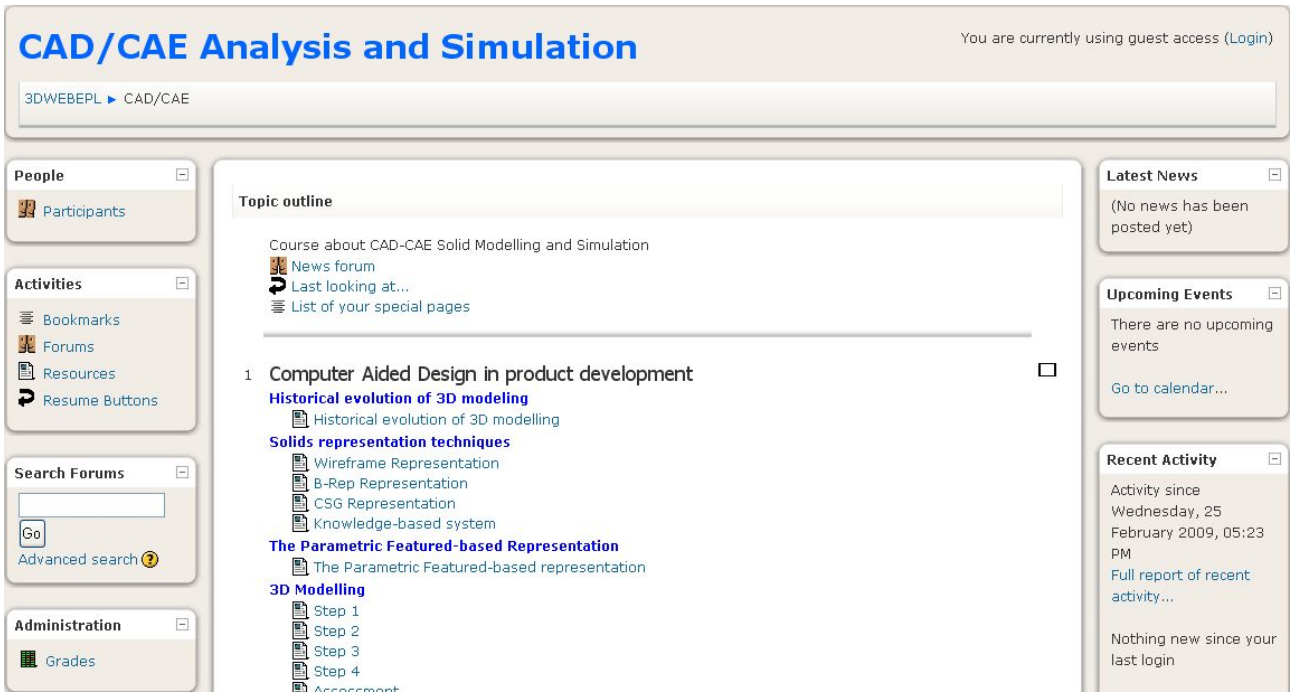

Fig. 2 The moodle platform for the specific course about CAD-CAE

Our e-learning systems are based on the integration of texts, audio, video, animations and virtual technologies and thanks to these technologies are deeply affecting the traditional ways of teaching and learning in our mechanical courses (fig.3).

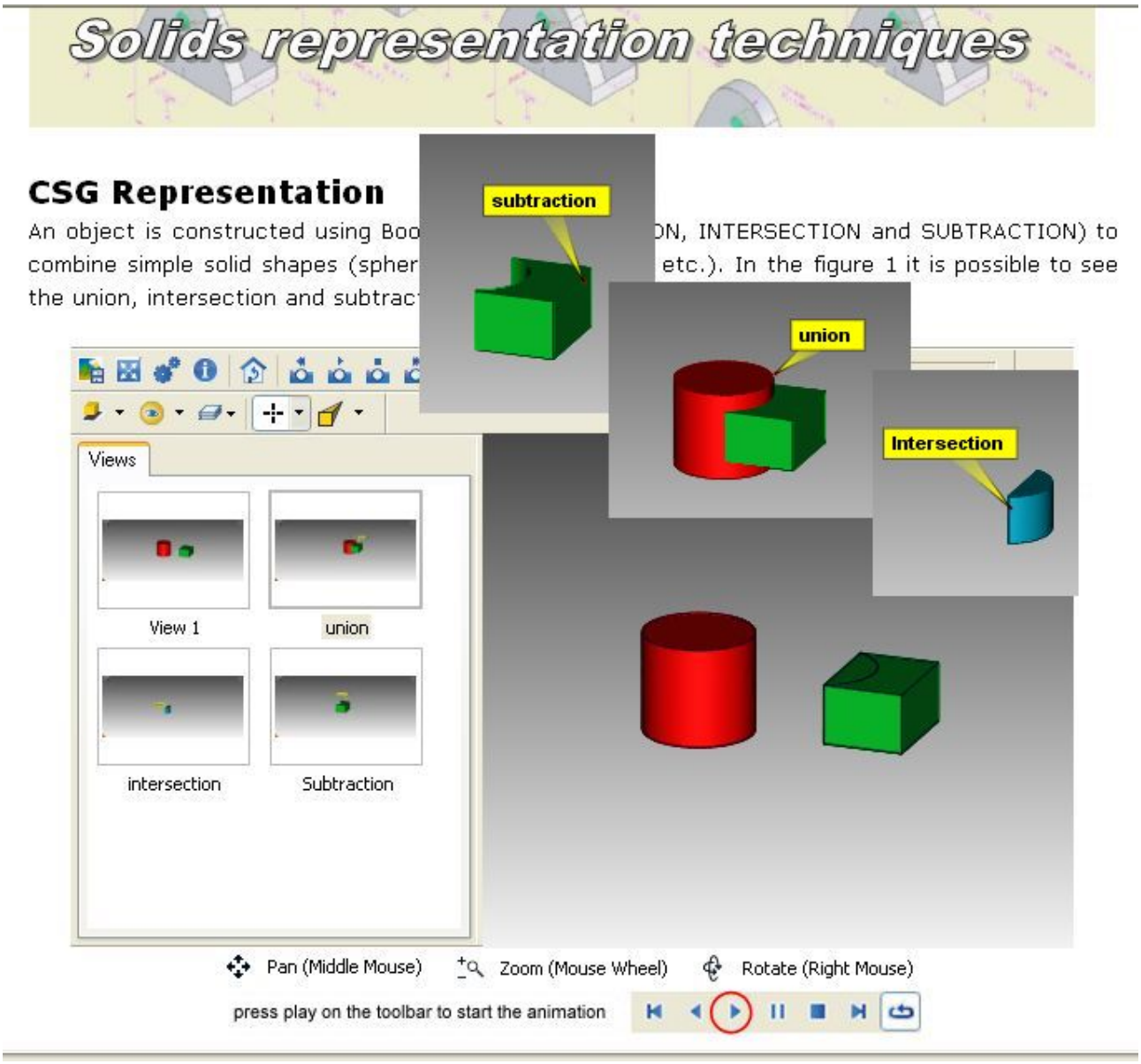

Fig. 3 Example of implementation of Web3D technologies within one module page

Web3D technologies present "technical advantages" such as

- to promote a sort of sharing of 3D models of any CAD format, because of the smaller dimensions of the 3D files that they can be generated and the easier way of managing these new files;
- to provide intelligent interpretation tools (3D Pointer, Virtual Folding, Animated Drawing Views, interactive 3D animations) that help the user easily understand and navigate the data;
- to create files that can immediately be viewed by anyone with a Windows operating system. No additional CAD/CAE software or viewers are required;

The Web3D technologies permit to create styles and intelligent views which can be applied to any content to ensure visual consistency. Exploded views can be created and annotated with labels and balloons (fig. 4).

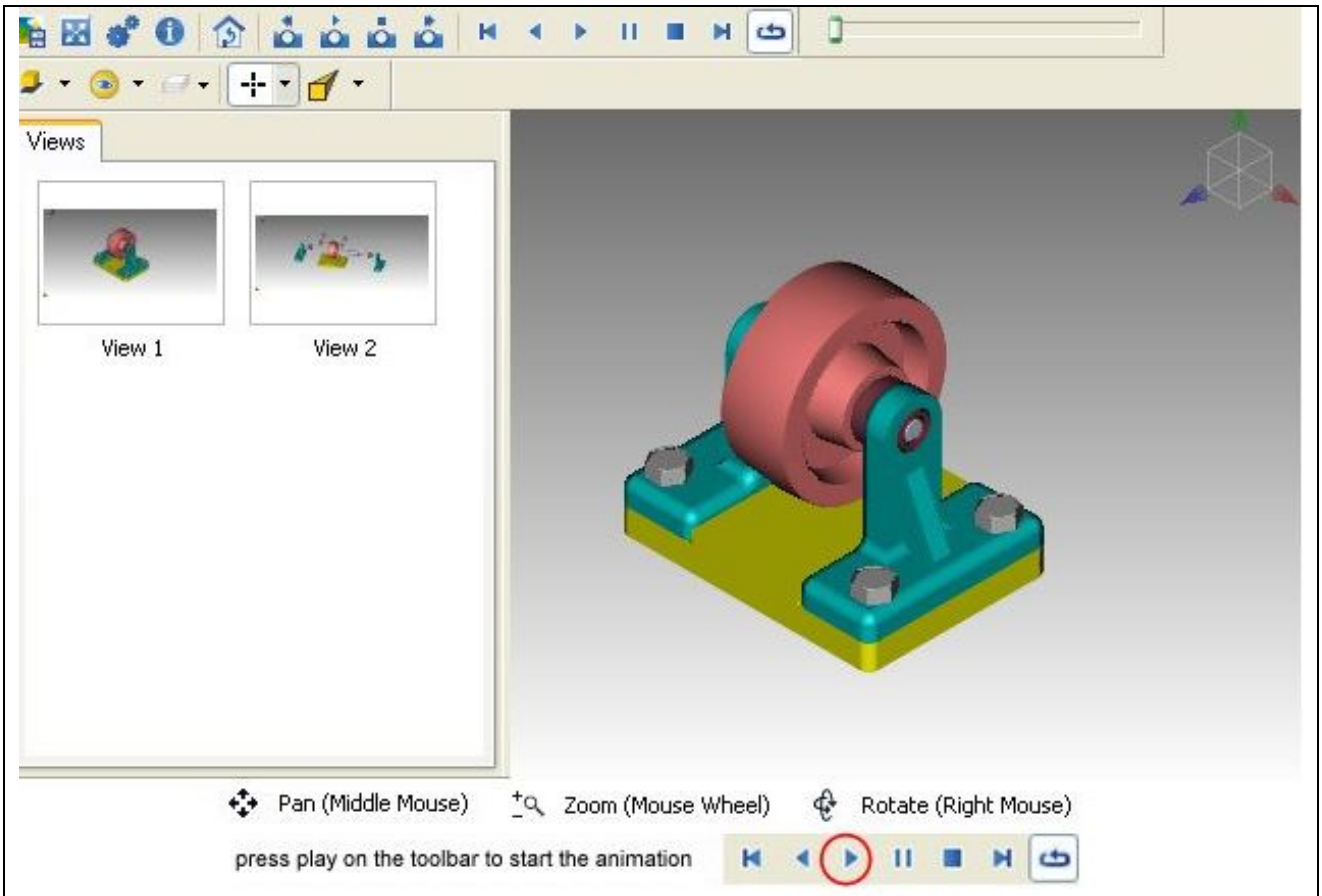
Views
View 1
View 2
Pan (Middle Mouse)
Zoom (Mouse Wheel)
Rotate (Right Mouse)
press play on the toolbar to start the animation

a

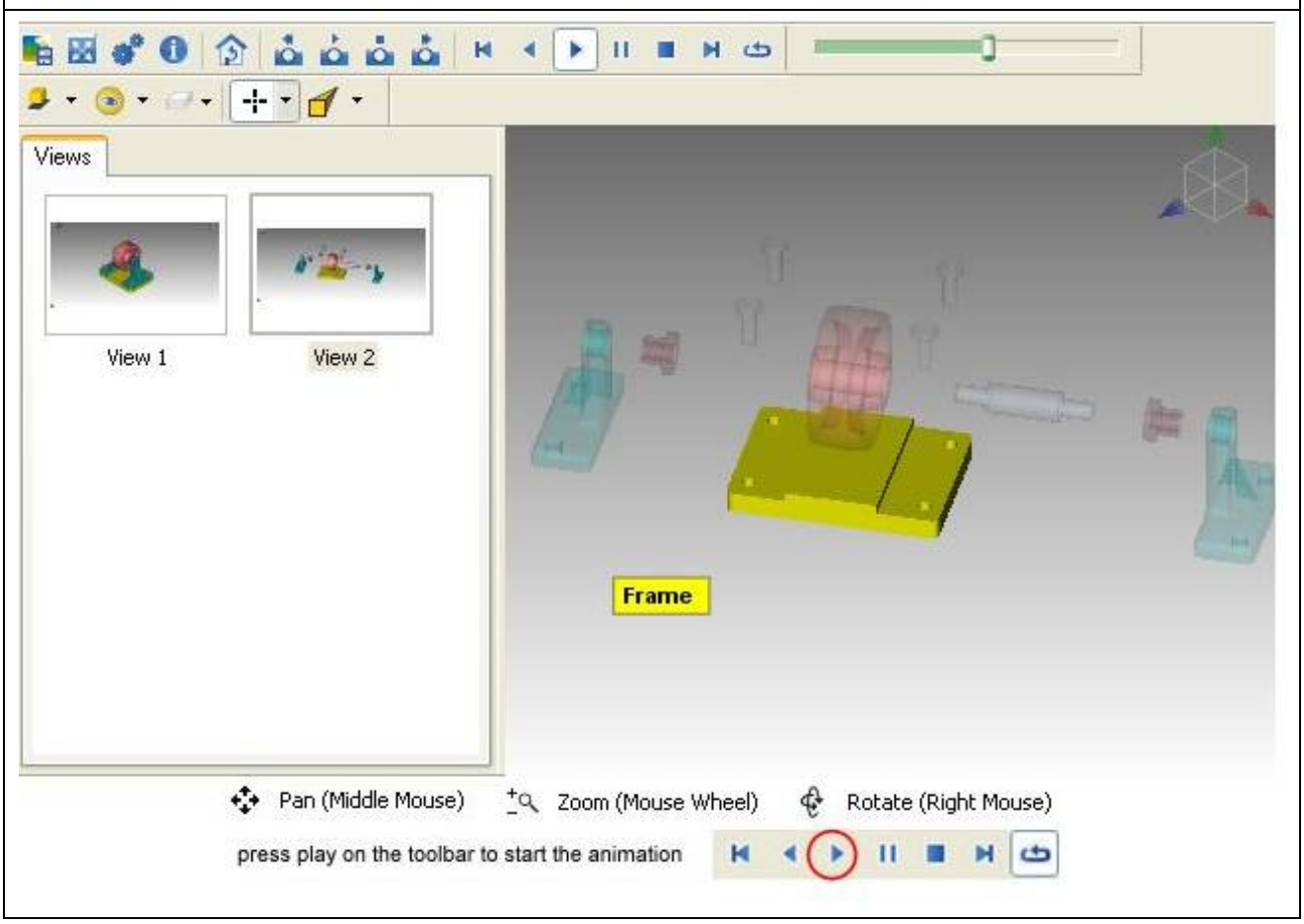
Views
View 1
View 2
Frame
Pan (Middle Mouse)
Zoom (Mouse Wheel)
Rotate (Right Mouse)
press play on the toolbar to start the animation

b

Fig. 4 3D model within one module page: assembly view (**a**) - exploded assembly view with label during the animation (**b**)

It is possible to apply text labels (for example to indicate some manufacturing information) to the models, and then lead every user to study the considered object in an easier way, thanks also to a more interactive approach. In fact everyone can work on these new files and maybe measure distances, or add some information like materials, textures, colors, etc., just “playing” with the 3D objects (turning them in many ways, creating or modifying point of views, zooming them in or out, hiding/showing parts and watching their cross-sections, creating realistic animations, adding lights or shades and creating high-resolution images, etc.) [(Chittaro &Ranon R, 2007), (Nigel, 2007), (Ong & Mannan 2004), (Tornincasa, Vezzetti & Violante, 2005)] (Fig.5).

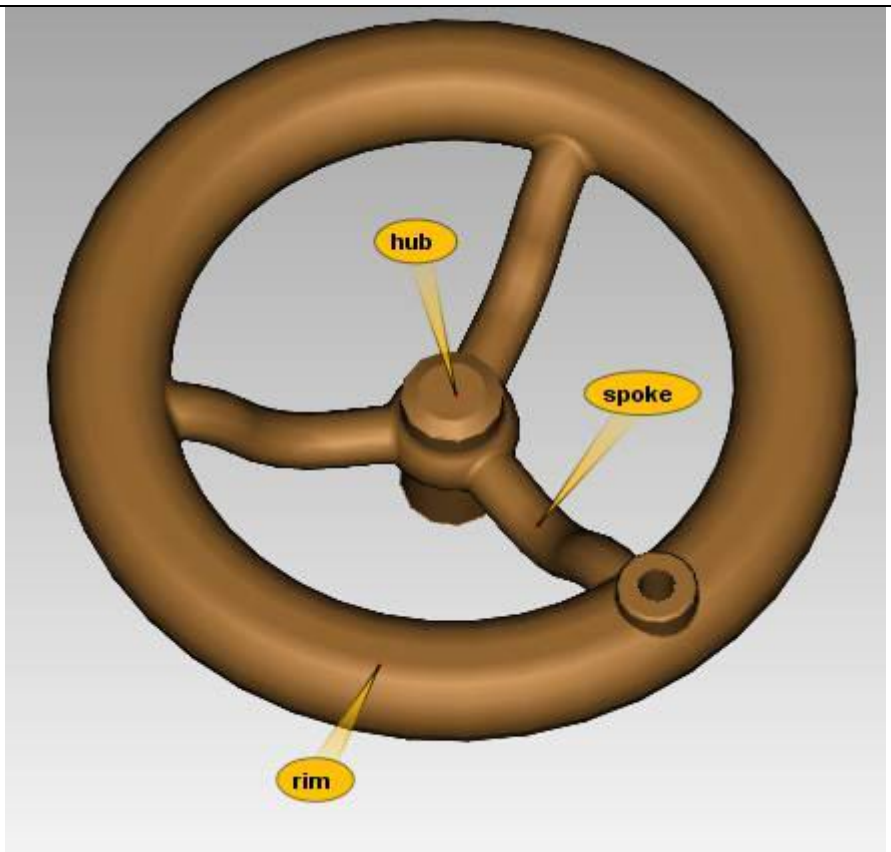

a

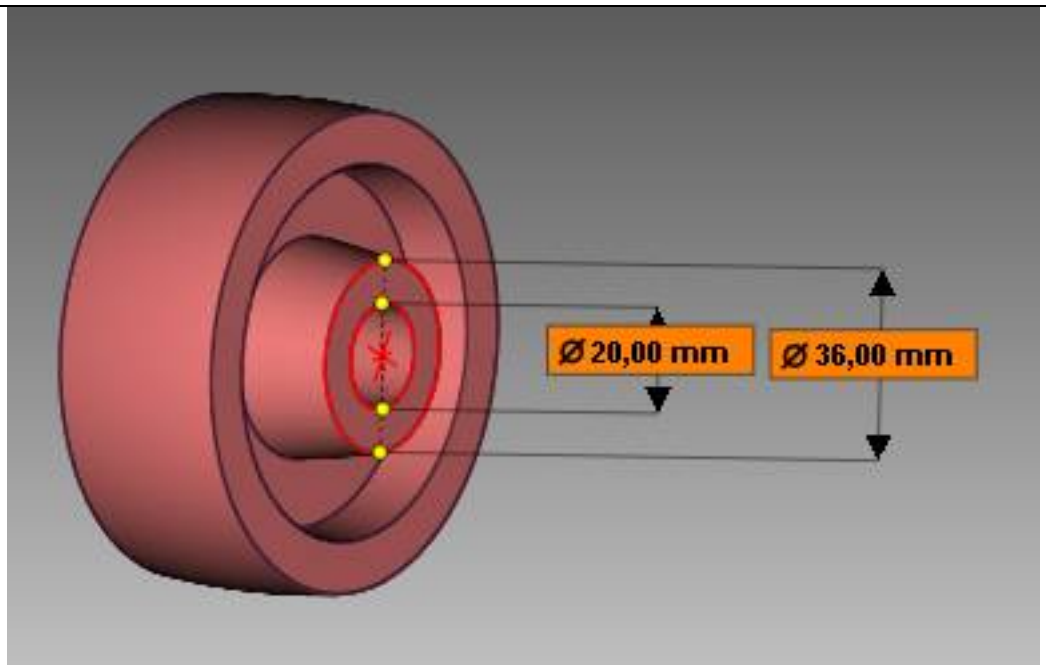

b

Fig. 5 3D model within one module page: annotations to the model (**a**) - dimensions of the model (**b**)

They can record a sequence of actions exerted on some elements of the whole model, then playing back the sequence. The actions can include movements of camera, objects, modifications of properties (change of color, modification of the opacity), actions of Digger.

For example in one module of the 3DWebEPL platform entitled “CSG representation” it was possible, beginning from the same 3D figure to obtain different complex solid shapes simulating geometrical operation such as revolution, extrusion, loft and sweep. In fact the starting 3D model, following the path indicated by the dashed line, simulates the geometrical operation (fig.6).

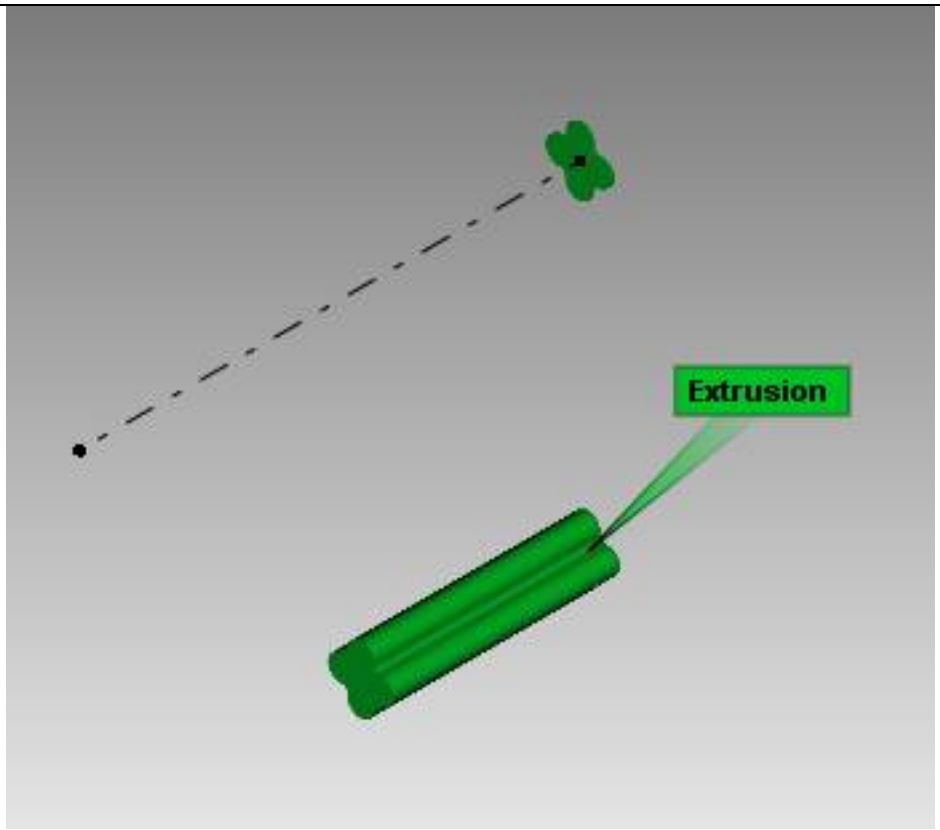

a

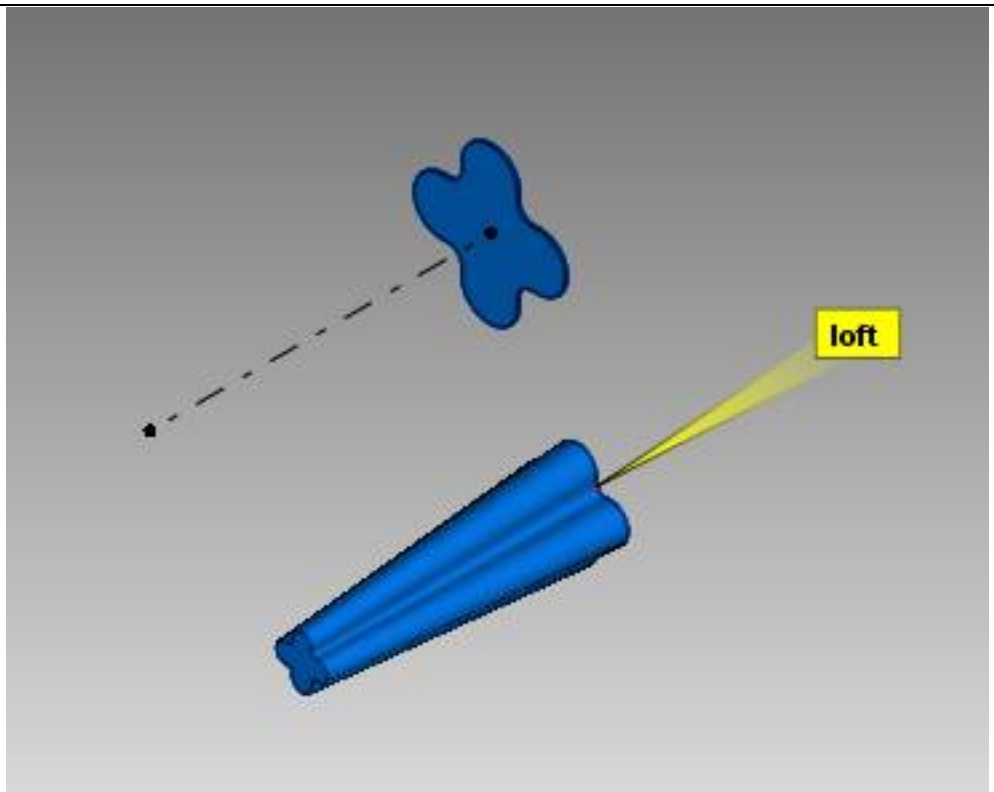

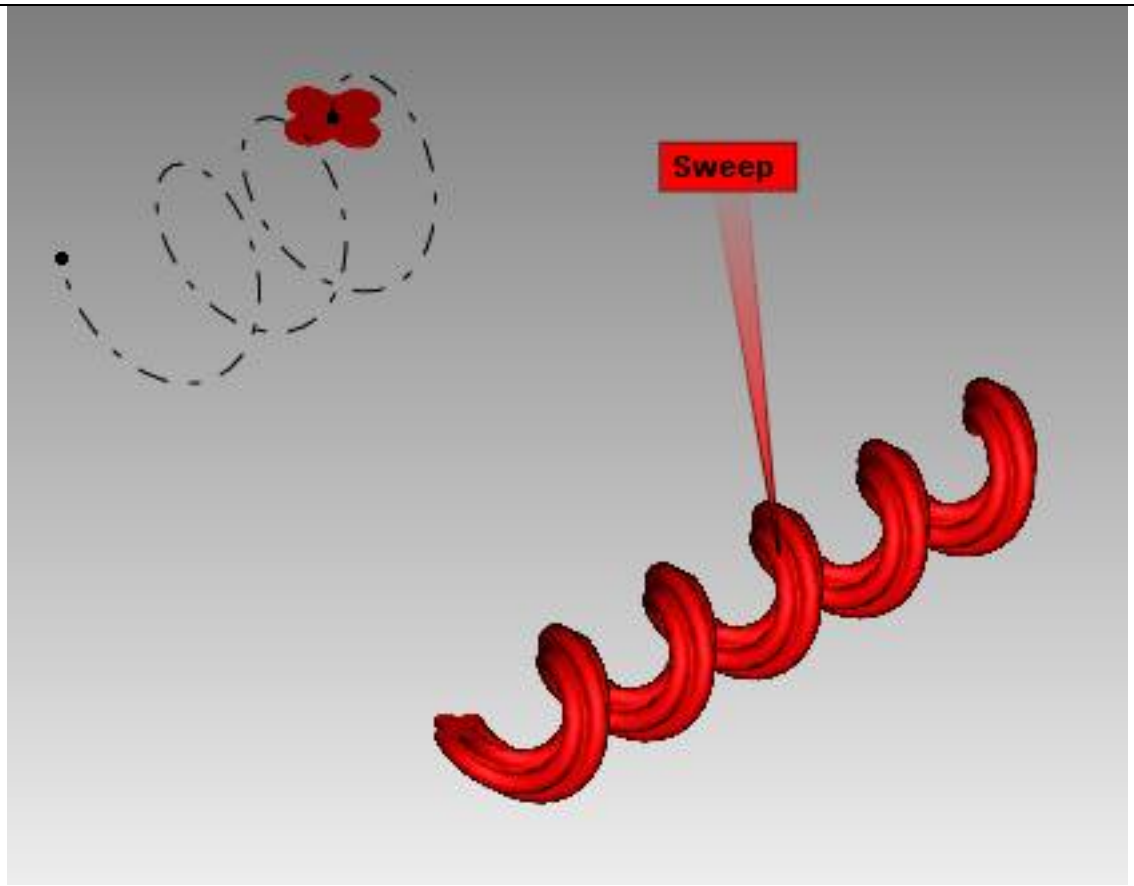

c

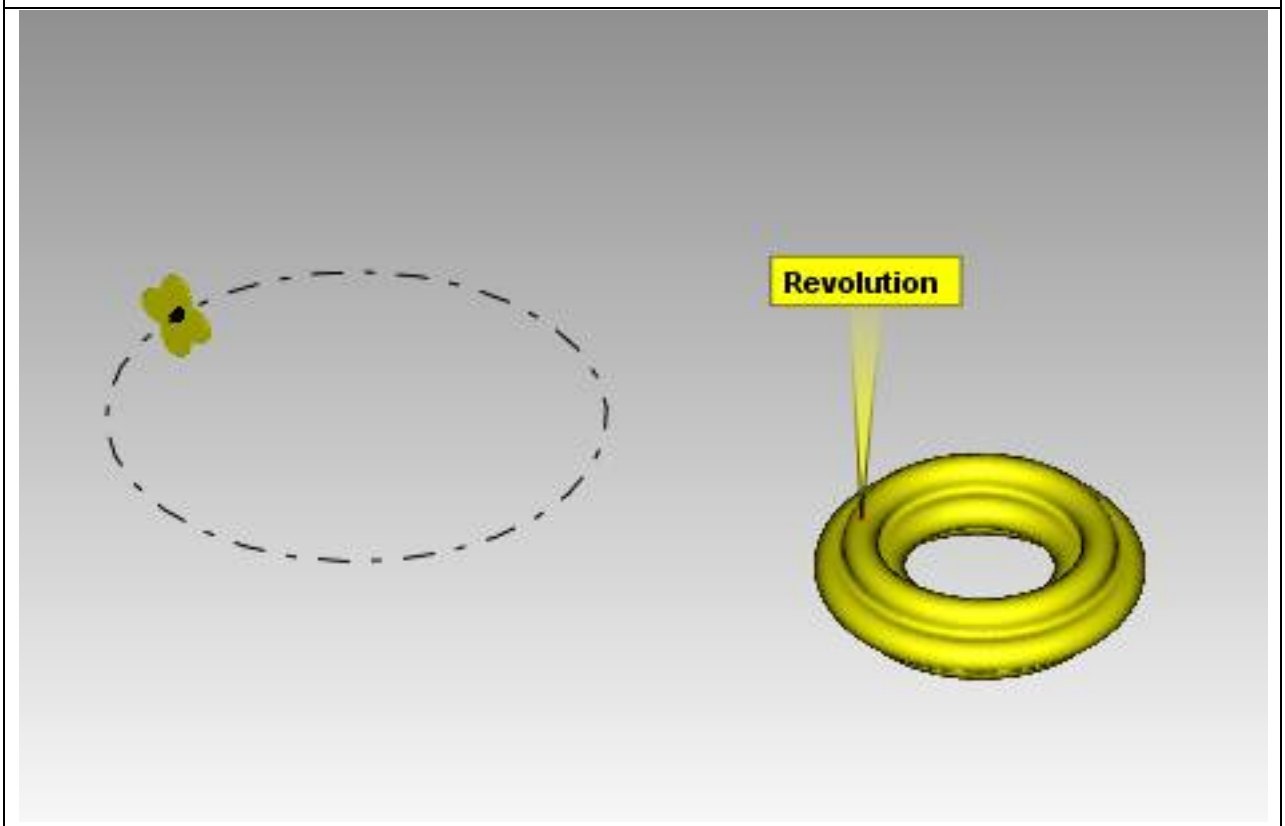

d

Fig. 6 Example of animations: extrusion (**a**), loft (**b**), sweep (**c**), revolution (**d**)

WEB 3D technologies: impact

Considering the analysis conducted by Granic, Mifsud & Cukušic (2009) and Grégoire, Bracewell & Lafferière (1996), we have identified the effects of Web3D technologies in our mechanical engineering course since their implementation.

The presented e-learning platform became a part of the education process during 2006 at Faculty of Mechanical Engineering.. The e-learning platform is presented to the students of Engineering Drawing Courses.

Students used the e-learning platform during the educational process and filled on-line questionnaires in order to present their experience and evaluate benefits from the WEB3D technologies (the results are presented in Fig. 7).

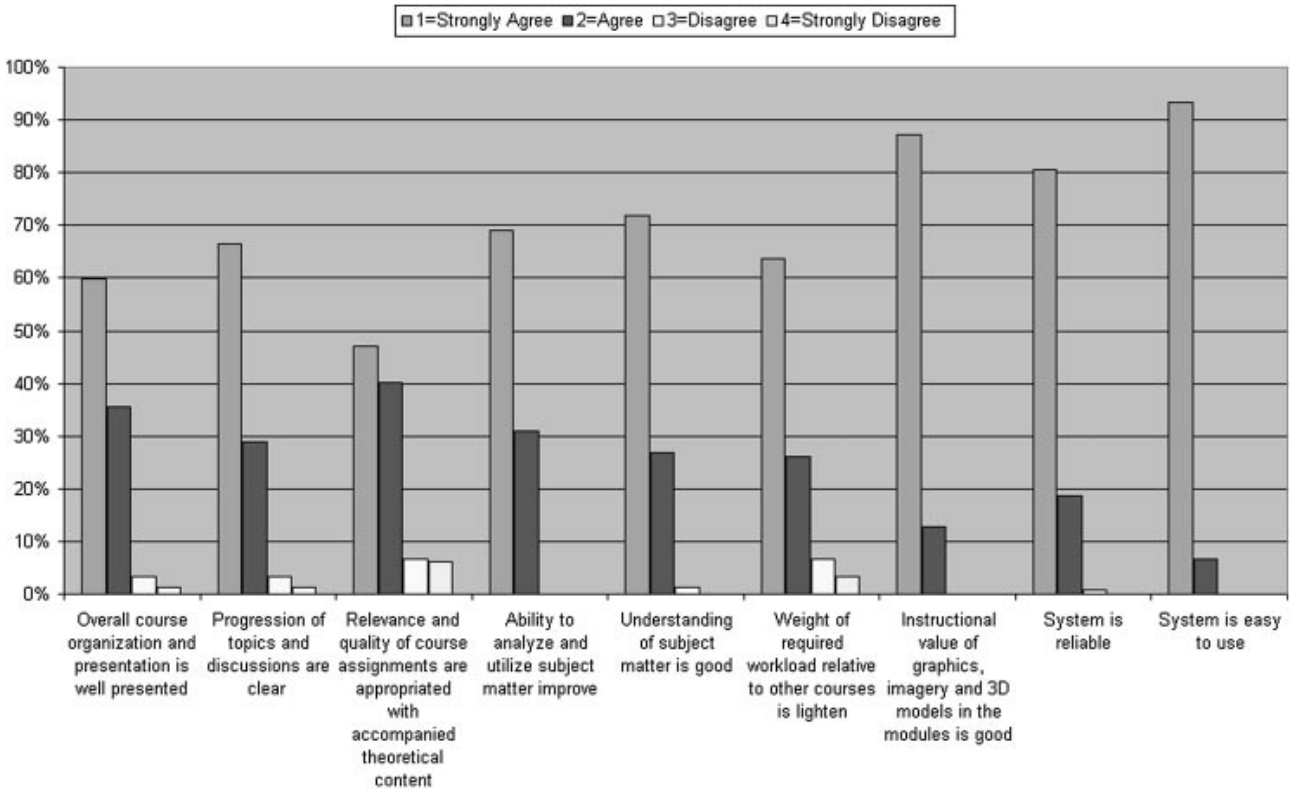

Figure 7 Students' questionnaire: character and organisation of the 3DWebEPL platform.

The positive response from the student population was undivided; they highly evaluated the effects of implementation of WEB3D technologies.

The students accepted this educational tool and responded with the response that the e-learning platform fulfilled planned educational goals, and that they completely understood the e-learning

platform' goals and tasks of exercises. The students also pointed that the system is user-friendly and easy to use.

The students were also encouraged to give their conclusions about the effects of the implementation of the e-learning platform. The results are gathered, grouped, and presented in Figure 9.

These are:

- Specific and finer learning of particular skills (problem solving, reasoning and creativity) have been performed by using these technologies;
- Students have demonstrated higher interest in activities which are presented and taught using these tools because they have an impact on both attainment and motivation;
- Students have a longer attention span and have higher degrees of concentration when activities are carried out using these technologies;
- Due to processes such as simulation, virtual manipulation, merging of data and graphic representation, the assimilation of various aspects is brought about, hence leading to more profound learning and understanding;
- Through these technologies the learning process begins to be viewed as continuous research rather than a series of facts that are to be learnt;
- Students satisfy curiosity and boast high potential for knowledge acquisition creating personal learning paths through an extended process of capturing and organizing the learning activity.
- The web3D applications do not generally change the teaching strategy but do assist in making learning independent as well as helping to reduce the need for direct teacher involvement.
- Better examination results (examination failure is of paramount importance in higher education, affecting educational institutions, teaching staff and students alike).

  In our university two hundred seven students have attended a mechanical drawing course without Webd3D technologies and two hundred twenty eight students have attended a mechanical drawing course with Webd3D technologies. At the end of the course, these students have taken and finished final exam. For the first group one hundred fourteen of students have passed (about 55%) and ninety three failed (about 45%). For the second group, we have registered an increased percent of passed students (about the 68%). We relate this encouraging result to use of Web3D technologies.

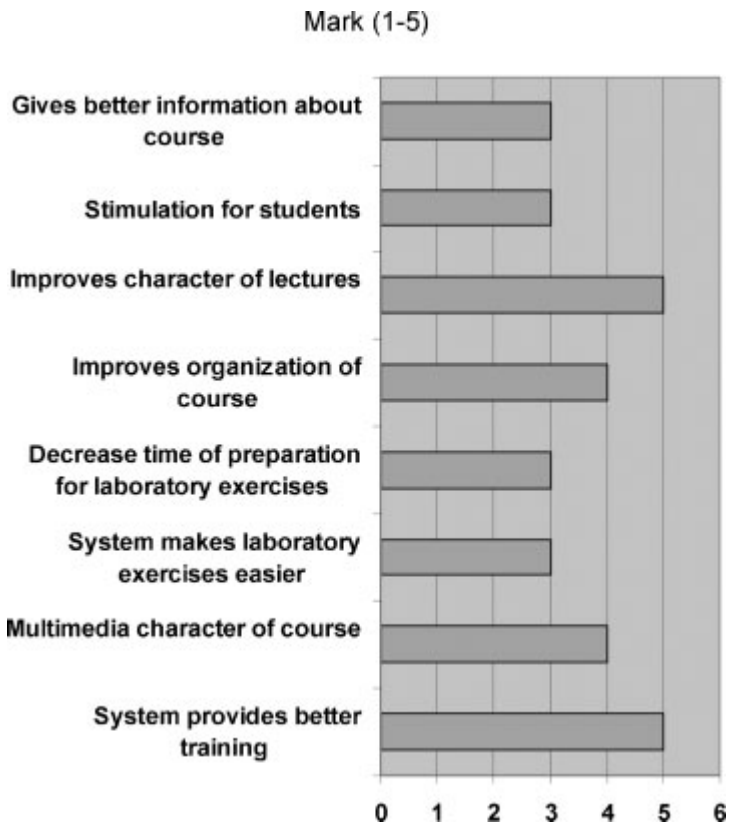

Figure 9 Students' questionnaire—effects of implementation of the web laboratory.

Besides the "pedagogical" benefits of the Web3D technologies related to human learning process and illustrated in the previous section of this paper,

Conclusions

The e-learning is a type of instruction has been using terms like computer assisted learning (CAL), computer based instruction (CBI) for over 30 years, along with other similar terms and abbreviations for the use of IT in education. Special progress in the use of computers in education was enabled by multimedia technology, and technological and pedagogical revolution in distance education happened with the development of World Wide Web.

The e-learning system offer:

1. Benefits to the learner:
    - ready access to course content and knowledge (including during evenings and weekends);

- identification of the weak/strong areas of subject knowledge;
- improved understanding of weak areas through repeated interactions;
- assessment on individual subjects;
- preparation for forthcoming lectures and catching up on any missed lectures;
- guidance/references for further reading;
- support for traditional lecture material;
- familiarization with course requirements.

2. Benefits to the teacher:
    - reduction in tutorial and advice time;
    - support for conventional lecture material;
    - consolidation of course material;
    - removal of routine queries;
    - incorporation of research into subject material;
    - ready definition of course content and provision of reference base.

E-education systems contain numerous visualizations, simulations, different interactive elements, tests, quizzes and other forms of information presentation.

E-education does not only consist of content presentation and knowledge check, but also of interaction with the participants by using appropriate communication tools which encourage the participants to greater motivation, acceptance and acquisition of educational systems and technologies, interest for the educational content, experience of the interpersonal contact with the instructor, as well as a feeling of social affiliation with a certain educational group.

So for all these reasons, investments into the preparation of an online instructional module are usually greater than they are for traditional offline instruction.

Some years ago our institution was involved in activating distance learning courses and it was decided to invest resources to develop a solution, based on the new technologies offered by computer based training and on pedagogic and communication aspects.

The final product of the project was a web platform for distance learning, based on 3D web technologies and usable by all the possible users (mechanical students and employees) on the European territory.

This platform has permitted to:

- develop effective and modern educational tools in order to overcome some of the limitations of conventional teaching methods in the training of fundamental concepts on the CAD/CAE/RE;

- use new technology that offers to the students the opportunity to interact within rich learning resources and animated environments, to call on information and knowledge when needed to solve problems, to investigate the subject matter at their own pace and in the order that they choose, rather than follow lectures planned by the instructor;
- to stimulate the students' interest, creativity and thinking, and thus, encourage them to pursue higher training.

In this paper we have showed the influence of new information technologies on online mechanical education and training, we have developed a QFD tool useful into the preparation phase of distance learning systems and we have explained our effort to design, implement and successfully distribute an e-learning system called 3DWEBEPL.

References

Alaoutinen S., Heikkinen K., Porrai J., (2010), *Experiences of learning styles in an intensive collaborative course*, Int J Technol Des Educ, DOI 10.1007/s10798-010-9135-3

Andrade Javier, Ares Juan, Garcıa Rafael, Rodrıguez Santiago, Seoane Marıa, Suarez Sonia (2008). *Guidelines for the development of e-learning systems by means of proactive questions*. Computers & Education, 51, 1510–1522. doi:10.1016/j.compedu.2008.02.002.

Azaklar Sezen, Korkmaz Hayriye, (2008). *A remotely accessible and configurable electronics laboratory implementation by using LabVIEW*. Computer Applications in Engineering Education, DOI 10.1002/cae.20276.

Bonisoli, Moos, Tornincasa, Vezzetti & Violante (2009). *Development of an e-learning course oriented to mechanical engineering field using WEB3d technologies*. Proceeding of XXI INGEGRAF - XVII ADM conference.

Brown Lankard Bettina, (2000). *Adult, Career, and Vocational. Education*. EDO-CE-00-218. Clearinghouse on.

Calignano F; Moos S; Tornincasa S; Vezzetti E. (2008). *Integration of web3d technologies for e-learning platform oriented to Product Lifecycle Management*, Proceeding of XXI Ingegraf - XVII ADM conference.

Chittaro L., Ranon R. (2007), *Web3D technologies in learning, education and training: Motivations, issues, opportunities*, Computers & Education, 49, 3-18.

Cole-Gomolski, B. (1999). *Web Training Requires. Different Educational Approach.* Computerworld 33, (8) 44.

Day A.J. & Suri A.K., (1999*). A knowledge-based system for postgraduate engineering courses*. Journal of Computer Assisted Learning. 15, 14–27

Daugherty J. L. , Custer R.L.,(2010), *Secondary level engineering professional development: content, pedagogy, and challenges*, Int J Technol Des Educ, DOI 10.1007/s10798-010-9136-2

Driscoll, M. (1999). *Web-based Training in the Workplace*. Adult Learning 10, (4). 21-25.

Fu Fong-Ling, Wu Ya-Ling, Ho Hsi-Chuan, (2009). *An investigation of coopetitive pedagogic design for knowledge creation in Web-based learning*. Computers & Education, 53, 550–562. doi:10.1016/j.compedu.2009.01.004

Granic, Mifsud & Cukušic *Design, implementation and validation of a Europe-wide pedagogical framework for e-Learning*. Computers & Education (2009), article in press, doi:10.1016/j.compedu.2009.05.018

Grégoire, R., Bracewell, R., & Lafferière, T. (1996). *The contribution of new technologies to learning and teaching in elementary and secondary schools: Documentary review*. Ottawa: SchoolNet. Retrieved October 15, 2008. Available from: <http://www.fse.ulaval.ca/fac/tact/fr/html/impactnt.html>.

Griffin, A.(1992). *Evaluating QFD's Use in US Firms as a Process for Developing Products*. Journal of Product Innovation Management, 9,171-187.

Guinta L.R., Praizler N.C. (1993*). The QFD Book, The Team Approach to Solving Problems and Satisfying Customers Through Quality Function Deployment.* AMACOM Books.

Kogure M., Akao Y. (1983). *Quality Function Deployment and Cwqc Japan*, Quality Progress, 16, 25-29.

Lowyck J., Pöysä J. (2001). *Design of collaborative learning environments*. Computer in Human Behavior, 17, 507–516.

Moos S, Tornincasa S, Vezzetti E, Violante M.G., Zompi A, (2009). *The impact of WEB3D solutions for product development e-learning*. Proceeding of 13th International Research/Expert Conference "Trends in the Development of Machinery and Associated Technology (TMT)"

Moos, Tornincasa, Vezzetti, Violante & Zompi (2009). *Design of a realistic Web3d simulator for biomedical E-Learning purpose: 3DWEBEPL*, Proceeding of XXI INGEGRAF - XVII ADM conference

Negash Solomon, Whitman Michael E. (2008). *Handbook of Distance Learning for Real-Time and Asynchronous Information technology information*, Information Science Reference, IGI global, USA

Nickerson Jeffrey V., Corter James E., Esche Sven K., Chassapis Constantin (2007). *A model for evaluating the effectiveness of remote engineering laboratories and simulations in education*, Computers & Education, 49 (3) 708-725. 10.1016/j.compedu.2005.11.019

Nigel W. John, (2007). *The impact of Web3D technologies on medical education and training*. Computers & Education, 49, 19-31.

Ong S. K., Mannan M. A. (2004). *Virtual reality simulations and animations in a web-based interactive manufacturing engineering module*. Computers & Education, 43, 361-382.

Passerini K., Granger M.J. (2000*). A developmental model for distance learning using the Internet*. Computers & Education, 34, 1-15.

Park J., Kim D-E., Sohn MH., (2010), *3D simulation technology as an effective instructional tool for enhancing spatial visualization skills in apparel design*, Int J Technol Des Educ, DOI 10.1007/s10798-010-9127-3

Parkinson B., Hudson P. (2002) *Extending the learning experience using the Web and a knowledge-based virtual environment*. Computers & Education. 38, 95–102

Pearson J. (2006). *Investigating ICT using problem-based learning in face-to-face and online learning environments*. Computers and Education, 47(1), 56–73.

Piccoli, G., Ahmad, R., & Ives, B. (2001). *Web-based virtual learning environments: a research framework and a preliminary assessment of effectiveness in basic IT skill training*. MIS Quarterly, 25(4), 401–426.

Prieto F., Redarce T., Lepage R. and P. Boulanger. (2002). *An Automated Inspection System*. The International Journal of Advanced Manufacturing Technology, 19, (12). DOI: 10.1007/s001700200104

Reference center for teaching methods and communication in e-education, (2007) http://www.carnet.hr/referalni/obrazovni/en/mkod/books.html, Accessed 23.04.2010.

Ronchi Alfredo M., (2008). *eCulture : Cultural Content in the Digital Age*, Publisher: Sprinter, Berlin. Doi:10.1007/978-3-540-75276-9

Rosenberg M. J. (2000*). E-learning: Strategies for delivering knowledge in the digital age*. New York, McGraw-Hill.

Rossouw A., Hacker M., J. de Vries M., (2010), *Concepts and contexts in engineering and technology education: an international and interdisciplinary Delphi study*, Int J Technol Des Educ, DOI 10.1007/s10798-010-9129-1

Seng, Al-Hawamdeh, 2001, *New mode of course delivery for virtual classroom*, *Aslib Proceeding* 53 (6), 238-242

Sun Pei-Chen, Cheng Hsing Kenny, (2005). *The design of instructional multimedia in e-Learning: A Media Richness Theory-based approach*, Computers & Education, doi:10.1016/j.compedu.2005.11.016

Sun Pei-Chen, Tsai Ray J., Finger Glenn, Chen Yueh-Yang, Yeh Dowming (2008). *What drives a successful e-Learning? An empirical investigation of the critical factors influencing learner satisfaction*. Computers & Education. 50, 1183–1202. doi:10.1016/j.compedu.2006.11.007

Suthers D. D., Hundhausen C. D., Girardeau L. E. (2003). *Comparing the roles of representations in face-to-face and online computer supported collaborative learning.*Computers and Education, 41(4), 335–351.

Tao Yu-Hui, Guo Shin-Ming, Lu Ya-Hui (2006). *The design and the formative evaluation of a web-based course for simulation analysis experiences*, Computers & Education, 47 (4), 414-432. doi:10.1016/j.compedu.2003.11.005

Teyseyre Alfredo R., Tandil Marcelo R. (2009). *An Overview of 3D Software Visualization*, IEEE Transactions on Visualization and Computer Graphics. 15, (1), 87-105,
http://doi.ieeecomputersociety.org/10.1109/TVCG.2008.8610.1109/TVCG.2008.86.

Tornincasa S., Vezzetti E. (2003). *A Web3D Collaborative Product Design, Proceeding of 7th International Research/Expert Conference "Trends in the. Developement of Machinery and Associated Technology (TMT)"*.

Tornincasa S., Vezzetti E. (2004). *Il Web3D per il collaborative design*, Proceeding of ADM-Ingegraf conference.

Tornincasa S; Vezzetti E; Violante M.G. (2005). *3D Interactive Technologies: supporting E-learning with Collaborative Virtual Environments (CVE)*, Proceeding of XVII INDEGRAF-XV ADM Conference, ISBN: 84-923253-3-X.

Urban G. L., Hauser J. R. (1993). Design and Marketing of New Products, Prentice-Hall, Second Edition.

Vezzetti E, Violante M.G. (2003), Web3d, Collaborative Design and PLM. Proceeding of International Workshop on "New WEB technologies for collaborative design, learning and training" Turin, Italy.