POLITECNICO DI TORINO
Repository ISTITUZIONALE

Numerical simulation of EMC tests for compliance

Original
Numerical simulation of EMC tests for compliance / Pignari, S.; Canavero, Flavio. - STAMPA. - (1999), pp. 495-498. (Intervento presentato al convegno 13th International Symposium on Electromagnetic Compatibility (EMC Zurich 99) tenutosi a Zurich (Switzerland) nel February 16-18).

Availability:
This version is available at: 11583/2499708 since:

Publisher:
Communication Technology Laboratory of the Swiss Federal Institute of Technology Zurich

Published
DOI:

Terms of use:

This article is made available under terms and conditions as specified in the corresponding bibliographic description in the repository

Publisher copyright

(Article begins on next page)

12 October 2024

93 N5

NUMERICAL SIMULATION OF EMC TESTS FOR COMPLIANCE

S. Pignari*, F. Canavero**
*Department of Electrical Engineering, Polytechnic of Milan, Italy
**Department of Electronics, Polytechnic of Turin, Italy
(Principle contact: pignari@polito.it)

Abstract: This paper addresses the problem of numerical simulation of Electromagnetic Compatibility (EMC) tests for compliance. The experimental setups for conducted emissions and radiated emissions tests are analyzed and modeled. The final goal is an approximate prediction of the EMC characteristics of an electric/electronic system, as experimentally measured by the proper setup specified by the regulations. EMC prediction based on this approach gives rise to new computer-based learning tools for students, that can be also of some help to designers, experienced in electronics, but with curricula which do not explicitly address EMC.

1. Introduction

The subject of Electromagnetic Compatibility (EMC) has grown of importance in the last years. This fact is strictly related to the increasing complexity and the higher potential of the last generation of electrical and electronic equipment.

As a matter of fact, the final goal of achieving better and better performances collides with the aim to limit electromagnetic pollution and, at the same time, weakens the system barriers against interference.

On the other hand, stringent legal restrictions imposed by national/international standardization bodies have made EMC a critical aspect also in the marketability of a product. The risk of a possible exclusion from the markets has driven industries throughout the world to revise design strategies which, up to few years ago, seemed to be stable and safe. Today's modern approaches in product development are EMC-oriented since the first stages of the design process.

A further critical aspect concerns the fact that EMC tests for compliance can be performed only by specialized staff operating in technical laboratories, qualified by the legal authorities. Such labs are equipped with sophisticated instrumentation, with special environments and measurement setups. Major drawbacks of this procedure involve both the increase of the product's final cost, and the ineffective interaction between prototyping and testing stages. This last point is by itself a potentially serious cause of price rising.

In this context, enhancing the efficiency of the overall design process of an electronic system requires to be able to anticipate the results of EMC tests for compliance at the design stage; in other words this means merging design and experimental tests. In practice this cannot be done, unless by resorting to numerical simulation.

According to this point of view, simulation tools are needed, able to predict the EMC characteristics of the system which is being designed, as experimentally measured by the proper setup specified by the regulations. The objective is the implementation of simple models characterizing the Equipment Under Test (EUT), the experimental setup, and the adopted instrumentation. Despite the great amount of work in the field of EMC prediction, the present generation of simulation programs reveals the lack of tools of this kind.

The final goal in simulating tests for compliance is an approximate evaluation of the EMC properties of a product. Such predictions may deeply differ from those obtained by conventional simulation tools, since the latter do not take into account the effects of the experimental setup, and the methods of measurements described in normative documents. Such tools can be of help to designers, experienced in electronics, but with curricula which do not explicitly address EMC.

A further aspect that encourages activity in this direction concerns education in the field of EMC. In fact, simulation tools of this category seem to be adequate and useful for students that, facing EMC, need to familiarize with experimental aspects, as well as with the order of magnitude of the involved physical quantities.

This paper addresses the problem of conceiving and implementing a numerical tool for the simulation of conducted- and radiated-emissions tests.

The simulation tool is implemented in the MATLAB environment. Main grounds for this choice are computational and graphical capabilities, and interactive programming features of MATLAB. The simple models adopted for the description of the experimental setups allow simulation times on a personal computer which span from a few seconds to some minutes.

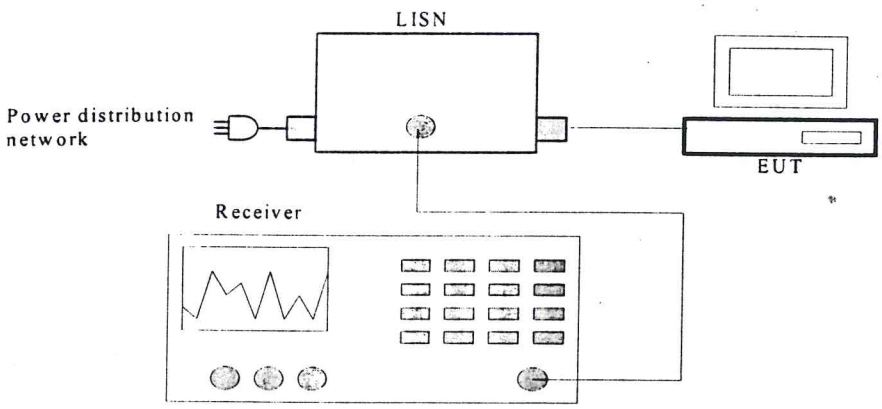

Fig. 1: Experimental setup for conducted emissions tests.

2. Conducted emissions setup

This section is devoted to a brief presentation of the circuit model used for the simulation of conducted emissions tests.

The experimental setup for conducted emissions, composed by the EUT and the measuring apparatus, is schematized in Fig. 1. The corresponding circuit model used for simulating compliance tests is illustrated in Fig. 2. The circuit model adopted for the EUT allows to distinguish differential- and common-mode noise components [1] via sources $\pm\frac{1}{2}V_D$ and $2I_C$. The values of such sources are assumed to be known, being obtained from previous measurements carried out on a prototype or from a more detailed circuit model of the EUT.

The LISN circuit model is the one specified by CISPR normative documents [2], and described in detail in [3]. Connection to the ac power mains is modeled by referring to a Thevenin equivalent circuit of the power distribution system, the impedance seen looking into the ac power network being characterized by mean values deduced from statistical analysis [4].

A power supply filter is included in the model of Fig. 2, that can be used to reduce emission levels. The filter topology is general enough to allow blocking both differential- and common-noise disturbances [3]. Deciding which filter components are to be employed and which values they should take can be done by subsequent simulations. As a matter of fact, a key point in simulating compliance tests is the opportunity to gain physical insight in the mechanisms of noise propagation and reduction, especially for what concerns differential- and common-mode components. As a first check of consistence of the prediction procedure, the experiment for the diagnosis and reduction of conducted noise emissions described by Paul in [3] has been simulated, and similar results obtained.

As a further example, a real device consisting of a dimmer has been realized, experimentally tested for conducted emissions, and the simulation tool employed for obtaining predictions. The experiment is aimed to show that, even in the worst case when an *a priori* estimate of the DUT conducted emissions is not possible, simulation of the measurement setup may bring out useful information.

A dimmer is an electronic control for varying the intensity of a lamp or other light sources. It is a passive device which operates by clipping the ac sinusoidal waveform. Despite the low circuit complexity, such a device has interesting features from the point of view of noise emissions. As a matter of fact, as no independent sources are present inside the dimmer, no circuit model for the prediction of conducted emissions can be deduced by considering the dimmer alone. In other words, noise emissions come only from the nonlinear behavior of the device, and not from internal sources. Moreover, emissions of such a device cover a very large frequency range, and this makes difficult the use of conventional circuit analysis programs for the simulation of the whole setup. In this sense, the dimmer belongs to a category of devices for which the prediction of noise emissions is a hard task.

In our experiment we have used a prototype of the dimmer for the measurement of conducted emissions, both with and without an input filter. Measurements have been carried out by means of an EMC receiver connected at the output port of a LISN.

Measurement data (magnitude of phase-to-ground and neutral-to-ground voltages) in absence of the filter have been employed to derive upper bounds on differential- and common-mode sources appearing in the circuit model of Fig. 2. At this point, simulation of the measurement setup has been employed for estimating emissions in presence of the input filter. Fig. 3 shows a comparison of prediction *versus* measurement, in presence of the filter.

In the plot, curve (a) represents the prediction of phase-to-ground voltage, curve (b) represents the same quantity obtained by measurement, and the remaining curve is the CISPR limit for class B devices.

We note that in a global comparison, the frequency behavior of measurement and prediction is very similar. A closer view reveals that at high frequencies the prediction fails, even if based on upper bounds.

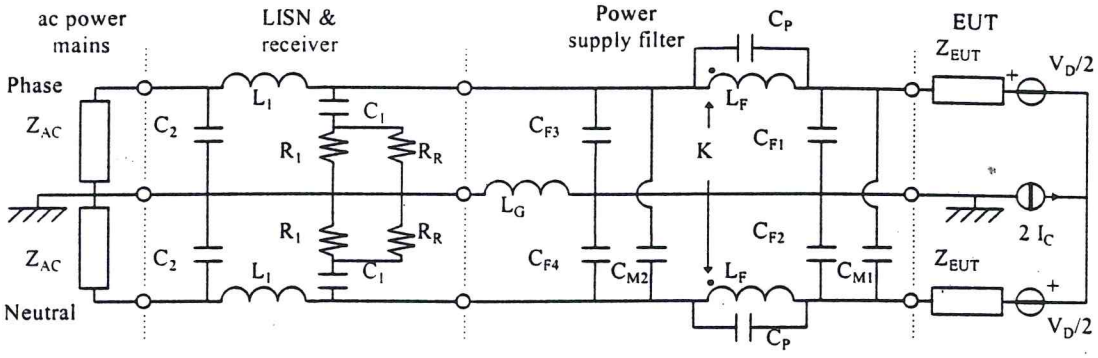

Fig. 2: Circuit model for conducted emissions tests.

This is explained by the limitations of the simple prediction model, which does not take into account DUT nonlinear behavior. We can say that global characteristics of conducted emissions can be successfully deduced from simulation of the measurement setup, but local frequency behavior and precise estimation of emission levels may be prevented by DUT non linear effects.

As a general comment, we can say that the reliability of predictions is strictly related to the impact that nonlinear effects play on emissions. If the DUT nonlinear properties are not very pronounced, prediction based on linear DUT models may give consistent information.

On the contrary, if nonlinear effects play a dominant role, simple linear circuit models of the DUT emission sources result in unreliable predictions, at least in specific frequency ranges.

In the case of a dimmer, these considerations can be easily verified by comparing the results obtained for different regulations of the lamp intensity.

As a final remark, it is worth noting that if no circuit models for the DUT emissions are available, measurements on a prototype may be employed in the simulation procedure to predict the blocking effects of an input filter.

3. Radiated emissions setup

This section is devoted to the presentation of the model used for the simulation of radiated emissions tests.

The experimental setup for radiated emissions measurement is described in CISPR normative documents. According to the requirements specified by the regulation, our model takes into account the EUT, a receiving antenna, and a measuring device.

The EUT is modeled as a set of elemental radiators, placed in a region bounded by an imaginary straight line. Short and long electrical dipoles, magnetic dipoles, rectangular and circular apertures have been considered as elemental radiators.

Source terms for such radiators are assumed to be derived by previous considerations or specific measurements carried out on a prototype, if available. For example, if a wiring structure (i.e. a connecting cable, a printed circuit board land, or any other type of interconnection) is suspected to give significant contribution to the radiated emissions, a previous circuit simulation based on distributed-parameter models could give precise information on the current distributions along the interconnection. This can be subsequently used to define the elemental sources for the simulation of the EMC compliance test.

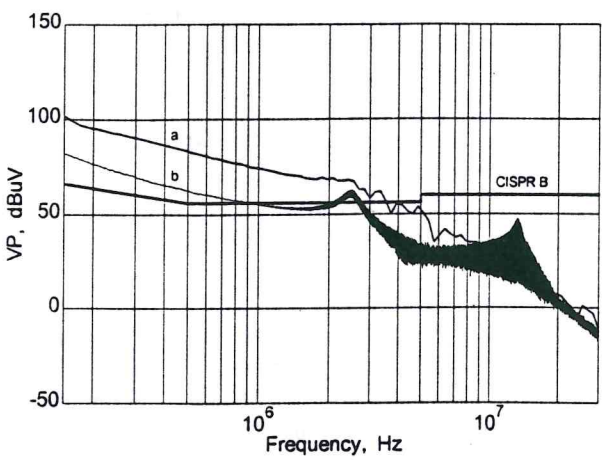

Fig. 3: Prediction (a) *versus* measurement (b) of the conducted emissions of a dimmer.

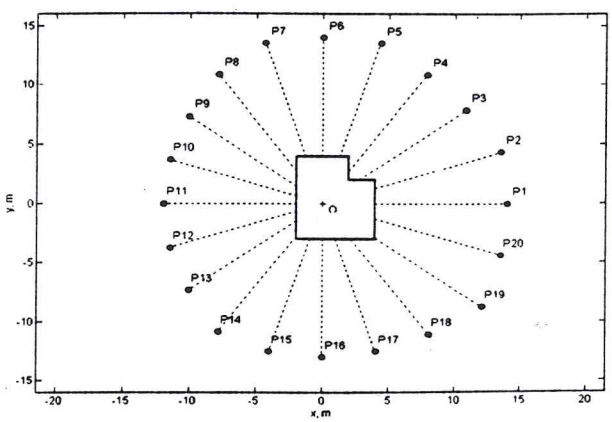

Fig. 4. Top-view of EUT geometry and receiving antenna positions.

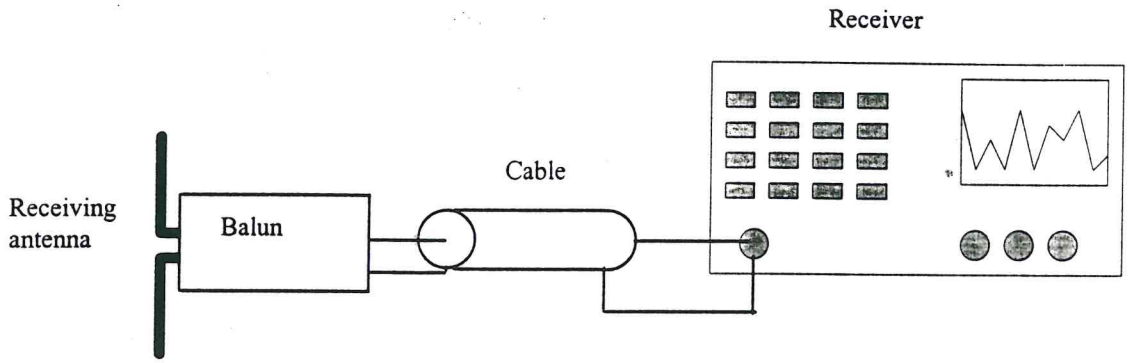

Fig. 5. Schematic representation of the receiving devices.

The model used for the receiving antenna is a balanced dipole; the antenna is moved around the EUT at the horizontal distance of 10 m from the EUT boundary, its vertical position is adjusted between 1 m and 4 m.
An example of a possible setup geometry is shown in Fig. 4, where a top-view of the EUT boundary and the receiving antenna positions used in the simulation are illustrated. The field radiated by the EUT, received by the antenna, and monitored by the measuring device is computed for both horizontal and vertical antenna-to-EUT polarizations.
Fig. 5 shows a schematic representation of the receiving devices. In the simulation, the antenna in modeled via its equivalent circuit, the cable is treated as a shielded transmission line, the receiver is simply modeled as a resistance connected at the cable far-end.
Numerical simulation of radiated interference measurements allows the prediction of the EUT radiated emissions, and their comparison with the regulatory limits. Due to the large number of variable parameters involved in the measurement procedure, subsequent processing of the simulation outputs allow to bring out the most significant contributions to radiation, for a selected frequency range, angular direction, height, or for a specific polarization.
For what concerns software implementation, an example of the MATLAB code required for the description of an EUT composed by circular apertures, short and long dipoles is shown in Fig. 6.

```
%...MATLAB description of EUT
EUT_BND = [1 .5 .5 .5 .5 1 ...
CIAPT([0 0.25 0.8],...)
CIAPT([0 0.3 0.8],...)
LODIP([0.075 0.25 0.8],...)
LODIP([0.15 0.175 0.8],...)
SHDIP([0.015 0.3 0.8],...)
SHDIP([0.03 0.3 0.785],...)
.........
%...Prediction of radiated-emissions
[EV, EH, F, H, PHI] = RAD_EM(FREQP,
DH, DPHI, FILEDESC, NV, RX)
.........
```

Fig. 6. Example of MATLAB description of EUT, for radiated-emissions test.

Virtual measurements via simulation of radiated emissions is interesting in the sense that it helps to get an insight of the radiation properties of the EUT.
This information is precious for students that address the problem of EMC characterization and, at the same time, it is useful for the designer since it can guide the development of a product.

4. Conclusions

In this work the problem of numerical simulation of the EMC experimental tests for conducted and radiated emissions has been addressed. Simple circuit and radiation models have been exploited to describe the EUT, the experimental setup specified by the regulations, and the adopted instrumentation.
The final objective of this work is the implementation of simple models taking into account the effects that the experimental setup and the methods of measurements play on the emissions levels.
The ultimate goal is to develop tools able to anticipate the results of EMC tests for compliance at the design stage. The work done on this subject is not enough to fulfill the final objective, however the approach to EMC prediction proposed in this paper can be of help to designers, experienced in electronics, but with curricula which do not explicitly address EMC. At the same time, simulation programs based on this approach represent new EMC computer-based learning tools evidencing the importance of experimental aspects.

References

[1] J. J. Goedbloed, *Electromagnetic Compatibility*, Prentice Hall Inc., 1990.

[2] CISPR 16 - 1, *Specification for radio disturbance and immunity measuring apparatus and methods - Part 1: Radio disturbance and immunity measuring apparatus* , IEC, 1993. Annex F.

[3] C. R. Paul, *Introduction to Electromagnetic Compatibility*, Wiley & Sons, New York, 1992.

[4] J. R. Nicholson and J. A. Malack, "RF impedance of power lines and line stabilization networks in conducted interference measurements," *IEEE Trans. On Electromagn. Compat.* vol. EMC-15, pp. 84-86, May 1973.