An automated N-port network analyzer for linear and non linear multi-port RF and digital circuits

IEEE Instrumentation and Measurement
Technology Conference
Ottawa, Canada, May 19-21, 1997

An Automated N-Port Network Analyzer for Linear and Non Linear Multi-port RF and Digital Circuits

N. Boulejfen*, A. Ferrero+, F. M. Ghannouchi*, A. B. Kouki*

*Ecole Polytechnique de Montréal
3333 Queen Mary, R220.5
Montréal, PQ, Canada H3V 1A2

+Departimento di Elettronica Politecnico di Torino Torino
C. Duca degli Abruzzi 24 10124 Torino, Italy
Phone (514) 340 4872 Fax (514) 440 5892 E-Mail : nboulej @grmes.polymtl.ca

Abstract - A new automated N-port time and frequency domain network analyzer based on the microwave transition analyzer MTA, used as a high speed digital oscilloscope, has been developed. The validity of the developed system is demonstrated with number of experimental measurements on different multi-ports structures.

I. INTRODUCTION

The transients in modern communication switches and high-speed digital integrated circuits and complex subsystems are characterized by signal rise times shorter than one nanosecond. At such speed, efficient time domain characterization of such devices and circuits becomes more appropriate and highly desirable. Presently, most available instrumentation is devoted to the characterization of two-port devices, e.g., high frequency sampling oscilloscopes and network analyzers with time domain capability. However, the increasing complexity of commercial communication circuits requires novel techniques to characterize multi-port circuits such as high speed digital interconnects and three-port active devices.

II. PROPOSED SET UP

In this paper we present a time domain 4-port network analyzer and its application to multi-port circuits. The system, shown in figure 1, is based on use of the microwave transition analyzer (MTA HP 75100) which is configured as a broadband sampling oscilloscope from DC to 40 GHz. The source signal is routed to the various DUT ports via a source switching matrix. One of the two channels of the MTA receives a sample of the source signal and is used as a phase reference (trigger). The second channel receives in turn all the incident and reflected waves sampled with N 10 dB bi-directionnel couplers and routed via a receiver switching matrix as shown in figure 1.

This approach is easily expandable to N-ports by adding more channels into the two switching matrices and more couplers (one channel and one coupler by a DUT port). For non sinusoidal signal characterization, the DC components of the signal are measured separately via bias Tees. Although the bandwidth of the receiver covers up to 40 GHz, the built system is limited by the bandwidth of the couplers and switches used. In our application, couplers covering 1 MHz - 2 GHz are used. By means of the different modes of operation offered by the MTA, the developed system allows the following measurements.

A. S Parameter Measurements

In microwave frequencies, the passive linear N-port structures are well characterized by there S parameters, relating the incident and reflected waves at there ports as it follows :

$$B_i = \sum_{j=1}^{N} S_{ij} . A_j \qquad (1)$$

where N is the number of ports, B_i and A_j are the reflected and the incident waves at the port i and port j respectively. From the equation (1) the entry S_{ij} of the S matrix are given by :

$$S_{ij} = \frac{B_i}{A_j} \qquad (2)$$

where $A_j = 0$ when $i \neq j$. It can be noted from equation (2) that the S_{ij} coefficients depend only on the ratios between waves and not on there absolute magnitudes and phases.

The measurement procedure start by configuring the MTA receiver in frequency sweep mode. At each frequency step, the MTA adjust the frequency of the RF source and switch it to one port of the device under test (DUT) at a time. Finally the MTA measure the magnitude and the phase of the ratio between the reference (channel 1) and one at a time of all the incident and reflected waves at the N ports of the DUT (channel 2). Once measured, the magnitudes and phases of the waves are used in equation (2) to compute the S matrix of the DUT. For calibration and de-embedding purposes, i.e, to transfer the measurement's reference plane from the input channel of the MTA (channel 1) to the plane of the DUT, the calibration procedure used is based on a generalized TRL (thru- reflect-line) calibration for multi-port network analyzer described in [4]. In this calibration technique the coupling between ports is neglected. For on wafer measurements, this approach is not very accurate and a calibration based on a switching network's leaky model is needed.

B. Time Domain Measurements

In the very large scale integration VLSI domain, the transient response measurement of the digital high speed interconnection is very important for characterizing the interconnection effect such as coupling, distortion, delay, etc. However, these structures propagate digital waves with wide frequency spectrum. To measure the transient response of such structure, the RF source is replaced by a pulse generator. The reference signal is then filtered using a band pass filter to obtain a sinusoidal signal with the fundamental frequency contained in the pulse frequency spectrum.

During the data acquisition process, the repetitive time domain sampling mode of the MTA is used. Up to 1024 samples can be obtained. The sampled data are Fourrier transformed into the frequency domain for calibration and de-embedding purposes. The de-embedded and error-corrected data are then transformed back into the time domain. The calibration procedure used is based on the approach in [4] with the addition of an absolute amplitude and phase de-embedding step for time domain waveform reconstitution.

III. EXPERIMENTAL RESULTS

To validate and test the proposed test set, two tests are made. First, the S parameters of a commercial 3 dB power divider (ARANEN 41620) are measured. The characteristics of this divider are : frequency : 0.5-3.0 GHz, isolation : 15 dB min., VSWR : 1.6 (input and output), insertion loss : 0.75 dB max., amplitude balance : 0.4 and phase balance : 8 degree. Since no traceable multi-port standards are available the reciprocity property of passive devices offers a good criteria solution to verify the system accuracy. Figures 2, 3 and 4 show all the reflection and transmission coefficients between the three ports of the divider. Good agreement between the measured data and the manufacturer specifications of the divider was observed. In the second test and in order to verify the time domain capability, two coupled lines with 1 mm width, 2 mm spacing and 80 mm long realized on a substrate with a relative permittivity of 3.8, was used. One port (port 1) of the coupled lines was excited by a square wave with 0.5 volt of magnitude, a frequency of 15.63 MHz and 50 per cent of duty cycle. The signals at the four ports of the lines were measured and shown in figures 5 and 6. The represented waves in the sense line describe the crosstalk effect in the two coupled line network. The frequency pulse is limited to 15.63 MHz because no higher speed pulse generator was available.

IV. CONCLUSION

A new set up for the time and frequency domain characterization of multi-port linear and non linear microwave circuits is presented. A prototype for four port devices was designed, realized and tested. The validity of the concept and the theoretical background of the approach was demonstrated with two different tests : frequency domain and time domain measurements. The flexibility and accuracy of this set up make it useful for digital high speed interconnections characterization and complex linear/non linear measurement.

REFERENCES

[1] J. Verspecht and K. Rush, "Individual Characterization of Broadband Sampling Oscilloscopes with a Nose-to-Nose Calibration Procedure", *IEEE Trans. Microwave Theory and Tech.*, Vol. 43, NO. 2, pp. 347-354, April 1994.

[2] M. Sipila, K. Lehtinen and al., "High-Frequency Periodic Time-Domain Waveform Measurement System", *IEEE Trans. Microwave Theory and*

Tech., Vol. 36, NO. 10, pp. 1397-1405, October 1988.

[3] U. Lott, "Measurement of Magnitude and Phase of Harmonic Generated in Nonlinear Microwave Two-Ports" *IEEE Trans. Microwave Theory and Tech.*, Vol. 37, NO. 10, pp. 1506-1511, October 1989.

[4] A. Ferrero, U. Pisani and K. Kerwin, "A Vew Implementation of Multiport Automatic Network Analyzer", *IEEE Trans. Microwave Theory and* Tech., Vol. 40, pp. 2078-2085, Nov. 1992.

[5] F. M. Ghannouchi, F. Bouregard, R. Hajji, and A. Brodeur", A De-embedding Technique for Reflection Based S-Parameter Measurement of HMICs and MMICs", *Microwave and Optical Technology Letters*, Vol. 10, pp. 218-222, Nov. 1995.

[6] A. Ferrero, F. Sanpietro and U. Pisani, "Multiport Vector Network Analyzer Calibration : A General Formulation", *IEEE Trans. Microwave Theory and Tech.*, Vol. 42, No. 12, pp. 2455-2461, Dec. 1994.

[7] HEWLETT PACKARD", The Microwave Transition Analyzer: Measure 25 ps Transitions in Switched and Pulsed Microwave Components", *Product Note 70820-2.*

[8] D. Rubin, "De-embedding mm-Wave MICs with TRL", *Microwave Journal*, pp. 141-150, Jun. 1990.

[9] GLENN F. Engen and CLETUS A. Hoer, "True-Reflect-Line : An Improved Technique for Calibrating the Dual Six-Port Automatic Network Analyzer", *IEEE Trans. Microwave Theory and* Tech., Vol. 27, No. 12, pp. 978-993, Dec. 1979.

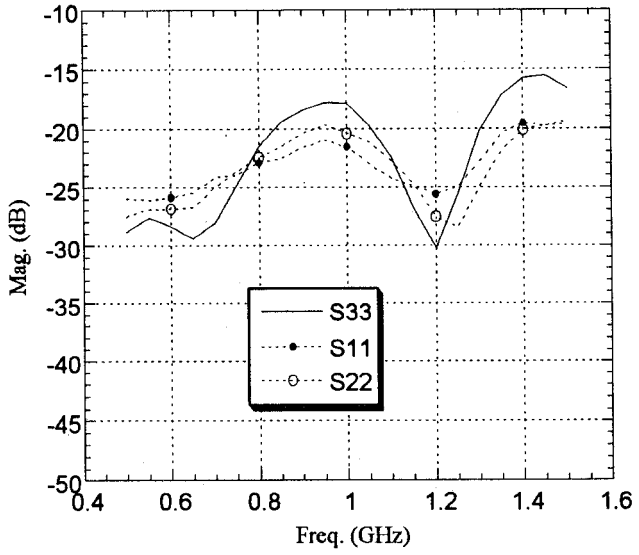

Fig. 2 Magnitudes of the reflection coefficients at the three ports of the power divider. port 1 and 2 : input ports, port 3 : output.

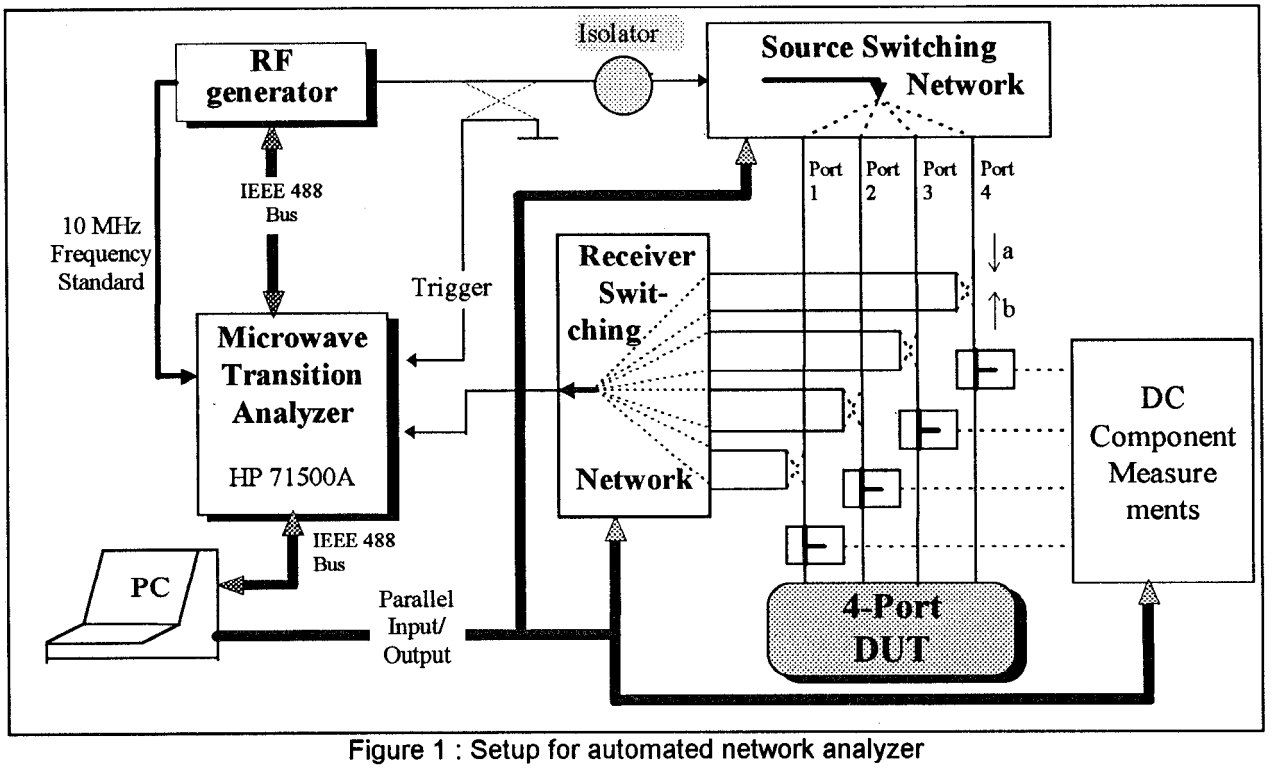

Figure 1 : Setup for automated network analyzer for linear and nonlinear multi-port devices

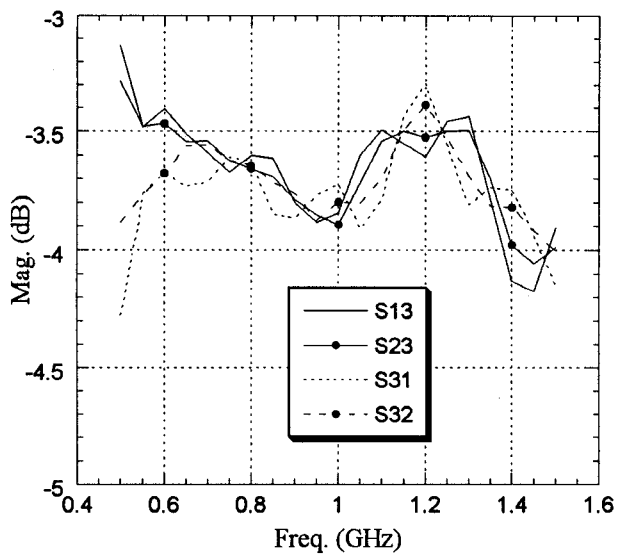

Fig. 3 Transmission coefficients between input ports (1,2) and the output (3)

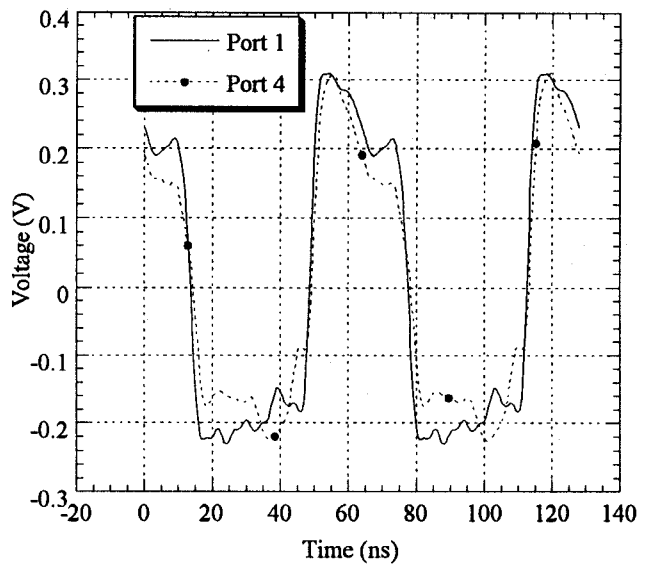

Fig. 5 Signals at the near (port 1) and far (port 4) ends of the driven line of the bus

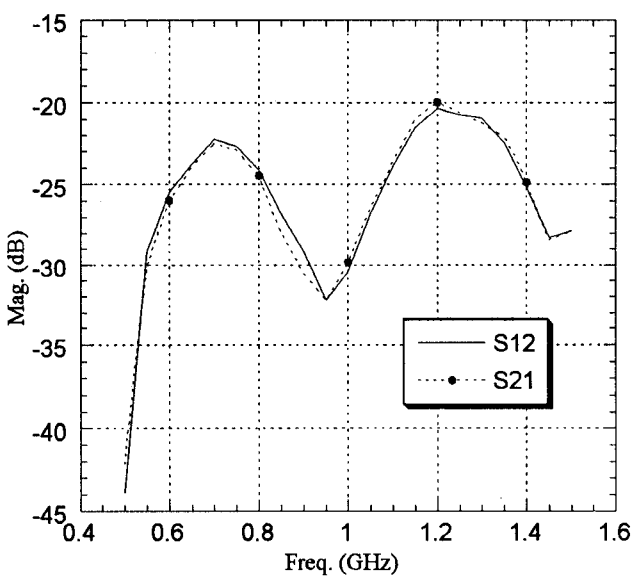

Fig. 4 Isolation Between the two input ports (1,2) of the power divider. The two curves show the reciprocity of the divider as a passive three port device.

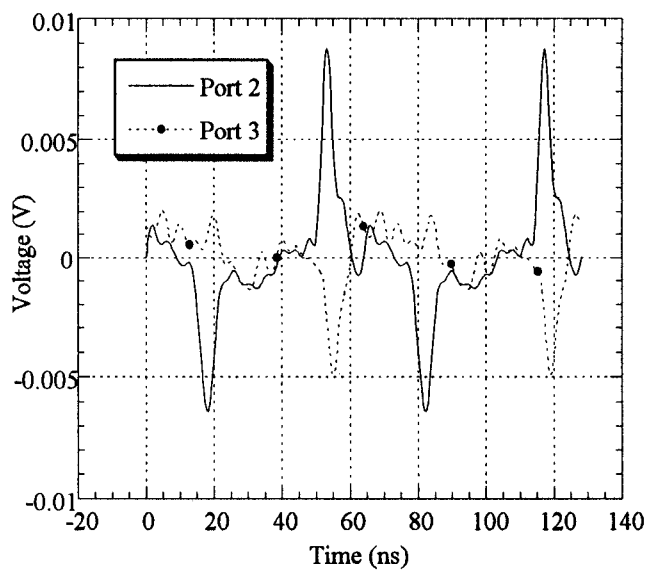

Fig. 6 Signals at the near (port 2) and far (port 3) ends of the sense line of the bus. The waveforms show the Crosstalk effect due to the electromagnetic coupling between the two lines.