POLITECNICO DI TORINO
Repository ISTITUZIONALE

A simplified algorithm for leaky network analyzer calibration

Original
A simplified algorithm for leaky network analyzer calibration / Ferrero, ANDREA PIERENRICO; F., Sanpietro. - In: IEEE MICROWAVE AND GUIDED WAVE LETTERS. - ISSN 1051-8207. - STAMPA. - 5:4(1995), pp. 119-121. [10.1109/75.372811]

Availability:
This version is available at: 11583/2497876 since:

Publisher:
IEEE

Published
DOI:10.1109/75.372811

Terms of use:

This article is made available under terms and conditions as specified in the corresponding bibliographic description in the repository

Publisher copyright

(Article begins on next page)

12 October 2024

A Simplified Algorithm for Leaky Network Analyzer Calibration

A. Ferrero, *Member, IEEE*, and F. Sanpietro

***Abstract*—A new algorithm for Network Analyzer Calibration is presented. The error model includes leakage effects and can be applied to a general *n*-port NWA. The 2-port 16-term model becomes a special case of this new technique which is also hopefully suitable for the calibration problems of multiport on-wafer probing systems. Experimental results testify the effectiveness of the new approach.**

I. Introduction

THE accuracy of a Vector Network Analyzer can be enhanced by different calibrations. A large number of error correction models and algorithms have been proposed to date [1], [2]. The 16-term error models is the most general approach for a 2-port NWA [3]–[5]. This model includes leakage and coupling effects among the ports which may heavily affect the results in an MMIC wafer probing system.

The increasing complexity of on-wafer techniques brings multicontact probes available and multiport device testing affordable, thus multiport, i.e., more than 2-port, NWA were introduced and proper calibration techniques developed. Several studies were carried out on multiport NWA (MNWA), but all except [6] deal with nonleaky solutions [7], [8]. In [6] R. A. Speciale suggested to extend the through-short-delay (TSD) technique to a general leaky n-port system.

This paper presents a generalization of the MNWA calibration introduced by the authors in [8]. Here we consider a general n-port leaky model and give an overall solution based on 2-port standards insertion.

The technique is flexible with respect to the number of test-set ports, the choice of the calibration devices and their port connections; furthermore the problem is solved by means of fully known 2-port standards. To account for partially known calibration devices, a weighed nonlinear least-squares method '[4], can be easily applied to MNWA calibration through the new formalism. As a special case the 16-term error correction model for 2-port NWA is obtained. In order to verify the new algorithm a special purpose leaky 3-port NWA was built and several devices measured.

II. General Leaky Model and Calibration Solution

Fig. 1(a) shows the leaky error model for a general MNWA while the equivalent non leaky one is given in Fig. 1(b).

Manuscript received Oct. 17, 1994; revised Dec. 5, 1994. This work was supported in part by Hewlett-Packard and in part by Italian National Research Council contract 9300662.

The authors are with Dipartimento di Elettronica, Politecnico di Torino, 10129 Torino, Italy.

IEEE Log Number 9409016.

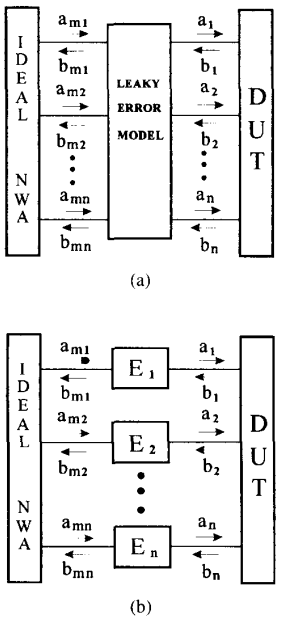

Fig. 1. MNWA error models: (a) with leakage, (b) without leakage.

In [7] the following equation was introduced

$$\mathbf{S}_m = \mathbf{\Gamma}_{00} + \mathbf{\Gamma}_{01}[\mathbf{I} - \mathbf{S}\mathbf{\Gamma}_{11}]^{-1}\mathbf{S}\mathbf{\Gamma}_{10} \tag{1}$$

where $\mathbf{\Gamma}_{ij}$ were diagonal error coefficient matrices which link the measured $\mathbf{S}_m$ with the DUT scattering matrix $\mathbf{S}$. $\mathbf{S}_m$ is obtained from a_{mi} and b_{mi} raw data after a suitable switch correction procedure [7]. In the leaky case the $\mathbf{\Gamma}_{ij}$ become general $n \times n$ matrices but (1) still holds true.

Equation (1) can be rewritten as

$$\begin{aligned}\mathbf{\Gamma}_{01}^{-1}\mathbf{S}_m - \mathbf{S}\mathbf{\Gamma}_{11}\mathbf{\Gamma}_{01}^{-1}\mathbf{S}_m - \mathbf{\Gamma}_{01}^{-1}\mathbf{\Gamma}_{00} \\ +\mathbf{S}(\mathbf{\Gamma}_{11}\mathbf{\Gamma}_{01}^{-1}\mathbf{\Gamma}_{00} - \mathbf{\Gamma}_{10}) = \mathbf{0}\end{aligned} \tag{2}$$

in a more convenient form

$$\mathbf{K}\mathbf{S}_m - \mathbf{S}\mathbf{L}\mathbf{S}_m + \mathbf{S}\mathbf{H} - \mathbf{M} = \mathbf{0} \tag{3}$$

where $\mathbf{K} = \mathbf{\Gamma}_{01}^{-1}$, $\mathbf{L} = \mathbf{\Gamma}_{11}\mathbf{\Gamma}_{01}^{-1}$, $\mathbf{M} = \mathbf{\Gamma}_{01}^{-1}\mathbf{\Gamma}_{00}$ and $\mathbf{H} = (\mathbf{\Gamma}_{11}\mathbf{\Gamma}_{01}^{-1}\mathbf{\Gamma}_{00} - \mathbf{\Gamma}_{10})$ are $n \times n$ complete matrices.

The objective is to establish a calibration technique so as to obtain $\mathbf{K}$, $\mathbf{H}$, $\mathbf{L}$ and $\mathbf{M}$, in order to de-embed the DUT matrix $\mathbf{S}$ from $\mathbf{S}_m$ as

$$\mathbf{S} = (\mathbf{M} - \mathbf{K}\mathbf{S}_m)(\mathbf{H} - \mathbf{L}\mathbf{S}_m)^{-1}. \tag{4}$$

1051–8207/95$04.00 © 1995 IEEE

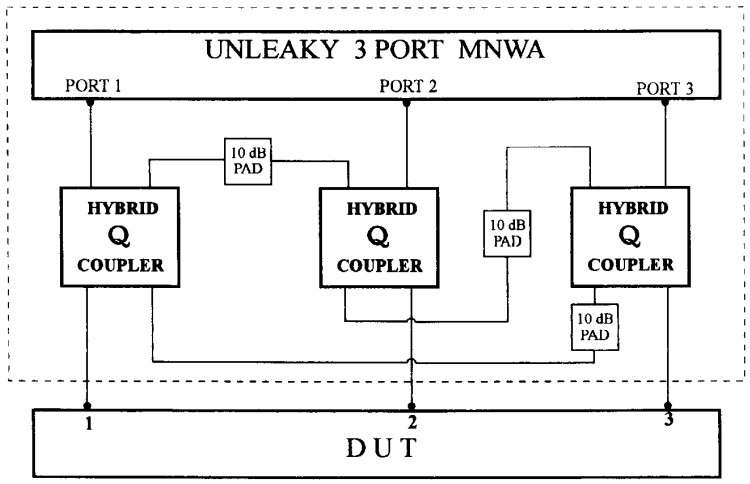

Fig. 2. MNWA set up to simulate a leaky MNWA.

For each multiport standard measurement, the calibration equation (3), can also be seen as n^2 equations of the form

$$-M_{ij} - \sum_{p=1}^{n} \tilde{S}_{ip} \left(\sum_{q=1}^{n} L_{pq} \tilde{S}_{mqj} \right) + \sum_{p=1}^{n} \tilde{S}_{ip} H_{pj} + \sum_{p=1}^{n} K_{ip} \tilde{S}_{mpj} = 0 \qquad \begin{matrix} (i = 1, \cdots, n) \\ (j = 1, \cdots, n) \end{matrix} \tag{5}$$

where $\tilde{\mathbf{S}}$ is the standard known scattering matrix and $\tilde{\mathbf{S}}_m$ is the standard measured matrix.

The calibration is performed by collecting enough equations similar to (5) from a proper number of standard measurements. These equations can be easily arranged so as to give an homogeneous linear system

$$\mathbf{Cv} = \mathbf{0} \tag{6}$$

where $\mathbf{v}$ is the unknown error coefficient vector expressed as

$$\mathbf{v} = [\mathrm{Col}(\mathbf{K}) \quad \mathrm{Col}(\mathbf{H}) \quad \mathrm{Col}(\mathbf{L}) \quad \mathrm{Col}(\mathbf{M})]^T \tag{7}$$

and the Col() operator reorganizes a matrix into a vector [4]. $\mathbf{C}$ is a $m \times 4n^2$ matrix which contains only the standard measurements and their S parameters.

To avoid the trivial zero solution, the homogeneous system (6) is normalized to one of the unknown coefficients, yelding an equation of the form $\mathbf{Nu} = \mathbf{g}$. This equation is similar to (9) in [8], but here we have $(4n^2 - 1)$ error coefficients while the nonleaky case has only $(4n - 1)$ terms. The algorithm is flexible with respect to the choice of the standards but their measurement set must give $m = 4n^2 - 1$ linear independent equations. The number of added coefficients from the leakless to the leaky model is $4n(n - 1)$. As an example in a 2-port NWA, we pass from the 8-term to the 16-term model. When the number of MNWA ports increases the influence of crosstalk terms may strongly affect the corrected data if a leakless technique is used.

The minimum number of standard connections is strongly dependent from the type of standards used; as an example, the calibration sequence proposed in [3] for a 2-port 16-term model gives 15 independent equations with only 4 standard connections.

We consider the case of a 3-port NWA where the error coefficients are $4 \times 3^2 - 1 = 35$. To determine the minimum number of standard connections which gives 35 linear independent equations, a computer simulation of the test set calibration was perfomed. It results that four different multiport standards are enough to obtain the necessary equations, but these four multiport standards can not be achieved just with 2-port device combinations, but at least one 3-port known device must be used. Since 3-port standard are not commercially available, we consider the insertion of five 3-port standards made up by 2-port devices. Among all the possible combinations the following one proved adequate to give all the 35 linear independent equations:

1) LOAD-SHORT-OPEN
2) SHORT-OPEN-LOAD
3) OPEN-LOAD-SHORT
4) THRU12-LOAD at port 3
5) THRU13-LOAD at port 2

The number of connections is then about a full 12-term on two of the three ports plus a one port calibration at port 3, but with the connection of each triplet all the 9 elements of $\tilde{\mathbf{S}}_m$ are measured. This procedure gives $m = 9 * 5 = 45$ equations thus $\mathbf{C}$ becomes a 45×35 matrix which is reduced with a QR decomposition technique. Obviously if the nonleaky case is considered the error matrices become diagonal and the standard reduced combinations proposed in [8], still applies.

III. Experimental Results

In order to verify the effectiveness of the calibration procedure a leaky 3-port test-set was built. The measurement configuration of Fig. 2 provides a simple approximation of leakage effects on a MMIC multiport system. The test-set

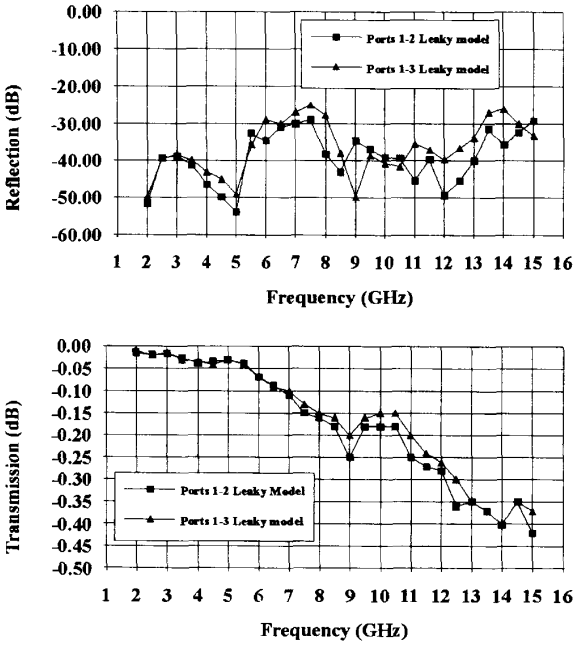

Fig. 3. Precision Air-line S parameters between ports 1&3 and ports 1&2.

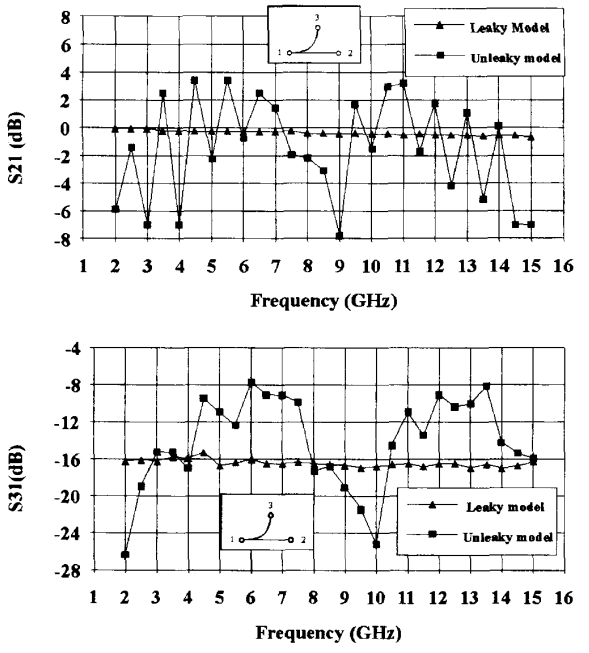

Fig. 4. Comparison of leakage and nonleakage calibration techniques on more significant directional coupler transmission S-parameters.

provides additional leakage paths to the nonleaky MNWA introduced in [7]. This leaky test-set has poor un-corrected isolation between the different ports (−16 dB) so as to better approximate the crosstalk path of a multicontact MMIC probe. The calibration was performed following the standard sequence suggested above. Two and three port devices were measured to verify the calibration effectiveness. Fig. 3 shows the S-parameters of a coaxial precision transmission line connected to different port combinations. Fig. 4 shows the transmission parameters of a directional coupler measured by the leaky MNWA. The same raw data were also corrected by the leakless calibration technique of [8]. This clearly illustrates one situation where the multiport leakless model does not work and where the negleted coefficients may strongly affect the results.

IV. Conclusion

An improved calibration technique for leaky multiport NWA was presented. The procedure is based on the insertion of commercial 2-port standards and it is flexible with respect to the choice of the standard insertion sequence. The experiments show the importance of a leakage correction when high level crosstalk terms in multiport system are involved. The technique is well promising for on-wafer MMIC multiport measurements.

Acknowledgment

The authors wish to thank Prof. Umberto Pisani and Prof. Claudio Beccari for the helpful discussion and Renzo Macelloni for the precious help during the device measurements.

References

[1] D. Rytting, "An analysis of vector measurement accuracy enhancement techniques," in *Hewlett-Packard RF & Microwave Symp., Rec.*, Mar. 1982.

[2] K. I. Silvonen, "A general approach to network analyzer calibration," *IEEE Trans. Microwave Theory Tech.*, vol. MTT-40, no. 4, Apr. 1992, pp. 754–759.

[3] J. V. Butler *et al.*, "16-term error model and calibration procedure for on-wafer network analysis measurements," *IEEE Trans. Microwave Theory Tech.*, vol. MTT-39, no. 12, Dec. 1991, pp. 2211–2217.

[4] H. Van hamme and M. Vanden Bossche, "Flexible vector analyzer calibration with accuracy bounds using an 8-term or a 16-term error correction model," *IEEE Trans. Microwave Theory Tech.*, vol. MTT-42, no. 6, pp. 976–987, June 1994.

[5] H. Heuermann and B. Schiek, "Results of NWA measurements with leakage errors corrected with the TMS-15 term procedure," *1994 MTT-S Dig.*, San Diego, pp. 1361–1364, 1994.

[6] R. A. Speciale, "A generalization of the TSD network-analyzer calibration procedure, covering n-port scattering-parameter measurements, affected by leakage errors," *IEEE Trans. Microwave Theory Tech.*, vol. MTT-25, no. 12, pp. 1100–1115, Dec. 1977.

[7] A. Ferrero, U. Pisani, and K. J. Kerwin, "A new implementation of a multiport automatic newtwork analyzer," *IEEE Trans. Microwave Theory Tech.*, vol. MTT-40, pp. 2078–2085, Nov. 1992.

[8] A. Ferrero, F. Sanpietro, and U. Pisani, "Accurate coaxial standard verification by multiport vector network analyzer," in *1994 MTT-S Dig.*, San Diego, 1994, pp. 1365–1368.