POLITECNICO DI TORINO
Repository ISTITUZIONALE

Energy networks in sustainable cities: towards a lull integration of renewable systems in urban area

Original
Energy networks in sustainable cities: towards a lull integration of renewable systems in urban area / Bellosio, Barbara; Giaccone, Luca; Guerrisi, Alessandra; Lazzeroni, Paolo; Martino, Mariapia; Tartaglia, Michele. - STAMPA. - (2011), pp. 1-6. (Intervento presentato al convegno IECON 2011 tenutosi a Melbourne nel 7-10 novembre 2011).

Availability:
This version is available at: 11583/2440581 since:

Publisher:

Published
DOI:

Terms of use:

This article is made available under terms and conditions as specified in the corresponding bibliographic description in the repository

Publisher copyright

(Article begins on next page)

12 October 2024

Energy Networks in Sustainable Cities: towards a full integration of renewable systems in urban area

Barbara Bellosio, Luca Giaccone, Alessandra Guerrisi, Paolo Lazzeroni,
Mariapia Martino and Michele Tartaglia *Senior Member, IEEE*
Politecnico di Torino – Dipartimento di Ingegneria Elettrica
corresponding author: michele.tartaglia@polito.it

Abstract- The European Commission is supporting many projects intended to improve the use of renewable energy sources and a special attention has been devoted to the case of large scale urban areas. The project POLYCITY represents a significant demonstration of this energy policy which is applied to 3 cities: Barcelona, Stuttgart and Torino. The case of Torino appears of particular relevance because it is dedicated to the improvement of existing building and installations which is in our opinion the most frequent situation. In particular the most qualifying characteristic of Torino project is the installation of a new combined heat and power generator (CHP) coupled with the existing district heating and an absorption chiller in order to supply energy more efficiently in a district which include the Housing Authority of the Province of Torino (ATC) and 30 council buildings. The paper describes this project highlighting the use of renewable sources and the initial results. The preliminary assessment of our experiment will be discussed according to socio-economic, environmental and energetic indicators.

Keywords: Polygeneration, smart grid, trigeneration, Policity Project

I. Introduction

Distributed renewable energy sources (RES) are modifying the structure of energy networks [1] and many efforts are necessary to develop innovative conversion systems which improve efficiency [2, 3] and reliability [4]. An accurate comparison between environmental performance of distributed generation and utility plants is also required [5] for a well sized development of the generating system. In addition it is necessary to analyze the impact of distributed generation on the grid and its possible effects on the voltage quality due to fluctuations of generated power [6] and on the urban distribution network fault currents [7]. Many research programs were started to better know [8] and manage [9] RES applications in urban areas.

Arquata is an area in Torino built at the beginning of XX century which involves about 87,500 m^2 and dedicated to social purposes (social houses, Fig. 1). The building construction standards were very simple and no heating system was initially installed. In proximity of this area the general office of the organization (ATC, see Fig. 2) which manages all the social houses of the Region Piedmont has been built in first 70's; this building needs both heating and cooling systems and it exhibits a lot of problems of energy consumption due to its wide glazed facades and poor insulations. The surface of this building is about 11,350 m^2. In recent years many rehabilitation actions were realized on this set of buildings. A district heating was installed in order to supply space heating and sanitary hot water to the residential building as well as to the ATC building.

The POLYCITY project, supported by the European Commission (Sixth Framework Programme – Priority 6.1 Sustainable Energy Systems), allowed to introduce further developments by installing a CHP which produces electric energy released to the medium voltage grid and heat which enhances the thermal power produced by the existing heat plant in winter and which is used for hot water production and for supplying an absorption chiller during summer.

Bulk heat is supplied by a natural gas cogenerator CHP (electrical power 970 kW, thermal power 1166 kW) which contributes to peak demand of three high efficiency boilers (thermal power 6000 kW). Heat is distributed by means of 1.9 km network of insulated pipes.

The CHP yearly production is reported in the Table I.

TABLE I
CHP YEARLY PRODUCTION

Electrical Energy	4133 MWh/y
Thermal Energy	4956 MWh/y
Service hours	4250 hrs/y

Thanks to the Polycity project, in Arquata one of the largest solar power generation installation in Italian urban area was realized. Photovoltaic modules have been integrated in the roofs of the social housing buildings and on the South-Est and South-West facades of the ATC building, where the modules act also to shade windows from direct solar radiation (see Fig. 3).

Fig. 1. Overview of Arquata Social Houses in Torino.

Mono-cristalline modules featuring 14.7% electrical efficiency were used for all the plants.

The PV plants (social buildings and ATC offices) have a yearly production of 132 MWh/yr and 55 MWh/yr respectively.

Fig. 2. ATC building.

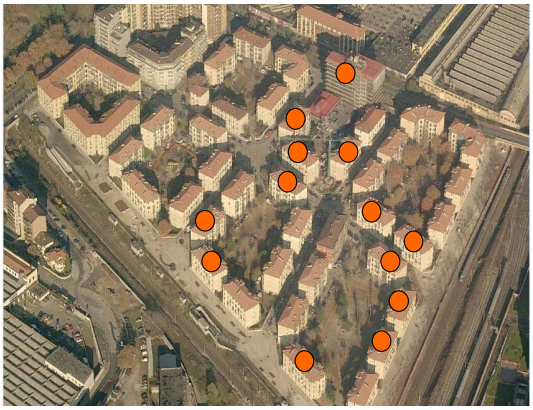

Fig. 3. Arquata district and ATC building PV panels.

Energy management in Arquata is supported by the Integrated Energy Managements system. The system is constituted by a communication infrastructure to control all the nodes within Arquata where energy is produced and/or consumed and/or exchanged with the electrical grid and a control system to perform energy management of the whole district. The preliminary study to predict possible interactions between the new electric system and the existing grid has been done in [10] for PV system and it was found that both PV and CHP power penetration are negligible because of their rated power very low in comparison with the installed power of the involved substations of the electric distribution. A possible optimization of the whole electric and thermal system has been developed in [11].

The following paper gives information on the metering and control system with the preliminary experimental results obtained after the first months of experimental assessment. This paper represents a starting point for the implementation of the adopted measures in other areas of Torino, in the frame of CIP-ICT PSP 2010 – GA 270981 BECA Project.

II. Power Scheme of the Energy System Production

The thermal plant (reported in Fig. 4) is constituted by one natural gas substation which supplies the thermal generation plant (3 heat boilers) and the CHP. One electric substation connects the medium voltage grid to the transformers for supplying the office building power systems and to connect the CHP generator. An interface "connection board" connects the PV systems of the office building to the low voltage grid. In Fig. 4 are represented the chillers and the heat sink of the office building and the available metering systems. As far as it is concerned with the electric energy, the energy meters of the city utility are used. It was possible to collect the following energy data:

- office building energy exchanged with the medium voltage (MV) grid through the sub-station;
- office building PV system supplied to the low voltage (LV) grid;
- energy supplied by the two sub-stations (Fig. 5) to the overall district;
- energy generated and exchanged of the 12 district PV systems;
- energy consumed by 10 characteristic district users like samples of domestic loads.

In the used metering system some instruments give us continuous data which can be analyzed on-line (mainly CHP quantities) while other ones (electric consumptions and PV generated energy) are available with some delay and (up to now) they are not yet automatically loaded into the Arquata project experimental data archive. The PV production of the district plants is used to supply the common loads of the buildings (stairs light, lift). The surplus of energy flows toward the network and when the production is not enough to supply the load the missing power is absorbed by the network. In Arquata district it is also installed a small weather station which measures external temperature, wind speed and direction, external relative humidity, solar radiation, air pressure and rain collector. The measuring system is necessary to compute some indexes to make the environmental and energetic performance evaluations.

The electric grid supplying the district is shown in Fig. 5 and it is managed by the city utility. The electrical network is composed of two MV/LV substations with transformer rated power equal to 400 and 250 kVA, with seven LV distribution lines. A preliminary analysis of the past district and office building consumption was performed. The model of the system was realized taking into account the upstream MV distribution line which feeds the two MV/LV substation of the Arquata district. Normalized domestic load curves were used to represent the electricity consumption in each node of MV line and measurement of electricity consumption was finally used to represent the office ATC building.

A load flow analysis has been performed by means of the commercial DIgSILENT code under CHP generation conditions. Voltage and power control systems of CHP unit were also modeled to verify the impact of cogenerator in the MV distribution network and it was verified that no critical condition could arise: the fault currents are weakly influenced by the new configuration; the voltage profiles over the MV distribution lines are not significantly modified (typically less than 0.5%). On the contrary, the power production of CHP unit, that is used from the local load, is able to increase the power flow on the MV line up to 15% with respect to no cogenerative configuration.

Arquata project included interventions on the generation system and interventions to reduce the energy demand like:

- insulation of concrete external structure;

- insulation of the office building interested: new glazed façade;
- substitution of 500 windows of district buildings: new windows with low emittance glazing and frame.

A reduction of 25% of energy demand is expected both by the office building and by the buildings of the district. The generation of electric energy both by means of CHP and by the PV systems together with the consumption reductions will give rise to an expected reduction of primary energy of 43% and greenhouse gas emissions 52% lower than in the existing situation.

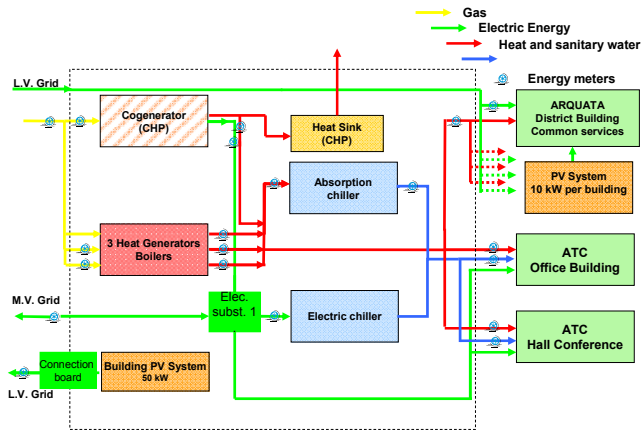

Fig. 4. Arquata energetic and metering system.

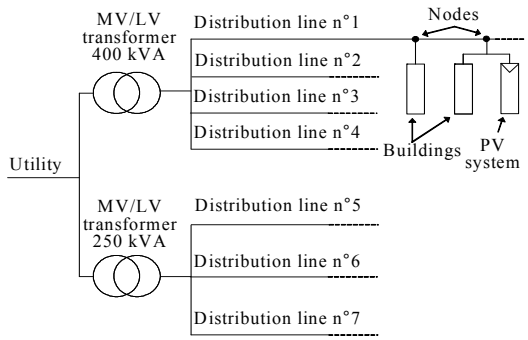

Fig. 5. Electric scheme of the grid supplying the district.

III. Preliminary Results

Arquata project started on May 2005 and all the interventions were completed at the end of 2008. The project will be completed in 2011, anyway some preliminary considerations can be done which can give useful suggestions in the case of a renovation of complex existing installations and buildings. The analysis of the results allows to indentify 5 environmental indicators which allow to evaluate the global impact of the Polycity project. The five indicators according to [12, 13, 14] are the followings:

1. Use of conventional energy
2. Renewable energy sources (RES) final energy use
3. RES capacity
4. Thermal energy consumption in buildings
5. Emissions

1) *Conventional Energy*

Two types of conventional energy have to be considered:

- Natural gas, that supplies the CHP and the three boilers;
- Electricity import (ATC building and council buildings).

Only the PV systems can be considered as Renewable Energy Sources while the CHP cannot be considered as RES because it is supplied by fossil fuel.

The data about the electricity consumption of council building are derived by the analysis on collected bills. Some measures about the PV systems production are not available. Then some data in the Table II are prediction calculated considering the installed power. Let us say that the period analyzed runs from October to September for three different periods, and that the electricity RES production data derives from a prediction calculated considering the installed power. Last, the RES share were calculated considering the data in some document published by Terna, the Italian major electricity transmission grid operator. The table computations are based on the following base formulas. Conventional energy per year *CE:*

$$CE = FF + \\ + \left[0.01 \times (100 - RES\%) \times (E_{consumer} + E_{aux}) - E_{RES}\right] \quad (1)$$

where:

- *FF* is the fossil fuel used in the respective area;
- *RES%* is the share of RES in national electricity mix;
- $E_{consumer}$ is the electricity consumption by regular customers;
- E_{aux} is the electricity consumption by CHP plant;
- E_{RES} is the electricity production by RES.

TABLE II
Conventional Energy

			2007/ 2008	2008/2009	Oct. 2009/2010
Fossil fuel consumption (FF)	Boilers	(kWh)	4,712,578.91	5,354,594.64	6,163,752.32
	CHP	(kWh)	11,903,128.13	9,248,883.44	8,926,740.00
	Total	(kWh)	16,615,707.04	14,603,478.08	15,090,492.32
Electricity consumption	ATC building	(kWh)	1,446,860.63	1,227,366.12	1,273,982.14
	Council buildings	(kWh)	1,155,000.00	1,155,000.00	1,155,000.00
	Auxiliary CHP	(kWh)	155,055.00	137,150.00	134,846.00
	Total	(kWh)	2,756,915.63	2,519,516.12	2,563,828.14
Electricity RES production	ATC building PV system	(kWh)	54,000.00	54,964.00	38,505.45
	District PV systems	(kWh)	124,800.00	124,800.00	124,800.00
	Total RES	(kWh)	178,800.00	179,764.00	163,305.45
RES share ***	National data	(%)	15.7	18.7	23.7
Conventional energy (CE)		(kWh)	18,759,837.35	16,471,743.06	16,883,617.13

2) Renewable energy sources (RES) final energy use

Data are collected on the renewable energy sources within the site and the RES energy produced in the analyzed year, that are the same for the conventional energy indicator, as reported in Table III. For the period 2007/2008 and 2008/2009 the district PV systems production considered data are a prediction because the measured data are not available. About this variable measured values are available starting from August 2009. On the basis of national regulation, in the Italian site the only Renewable Energy Source is the PV system. As regards the reference year (2007/2008) in the period October 2008 – September 2009 the consumption of RES is increased.

Figure 6 shows the PV production of the ATC building from April 2008 to June 2010 and Figure 7 shows a comparison between the PV production and the PV producibility for the ATC building system for the period April 2008 – March 2009.

3) RES capacity

The Arquata district is supplied by two MV/LV substations and by the CHP (only the ATC building). The Polycity interventions included the installation of PV systems with an overall peak power of 150 kW, instead 170 kW were installed: RES capacity is the 9.5% of the whole capacity of the electrical network (Table IV).

TABLE III
RES FINAL ENERGY USE

		2007/2008	2008/2009	2009/2010
ATC building PV system production	(kWh)	54,000	54,964.00	38,505.45
District PV systems production	(kWh)	124,800.00	124,800.00	124,800.00
Total RES production	(kWh)	178,800.00	179,764.00	163,305.45
Total electricity consumption	(kWh)	2,756,915.63	2,519,516.12	2,563,828.14
% of RES in electricity consumption	(%)	6.5	7.1	6.4

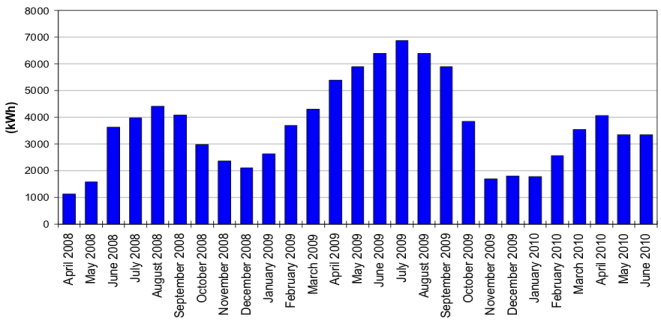

Figure 6. ATC building PV production.

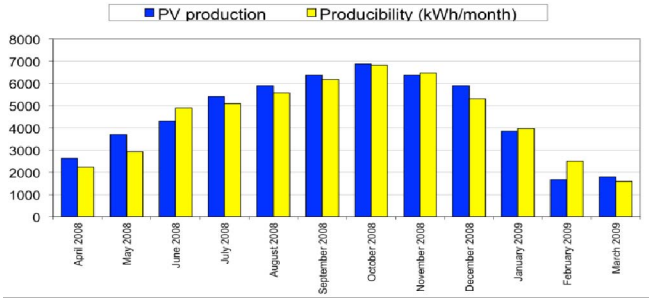

Figure 7. ATC building PV production and PV producibility.

TABLE IV
RES CAPACITY

			Planned	Realized
Conventional electric plants capacity	Substation 1	(kW)	400	400
	Substation 2	(kW)	250	250
	CHP	(kW)	970	970
	Total	(kW)	1620	1620
RES electric plants capacity	ATC building PV system	(kW)	50	50
	District PV systems	(kW)	100	120
	Total	(kW)	150	170
Total electric plants capacity		(kW)	1770	1790
% RES electric plants capacity		(%)	8.5	9.5

4) Thermal energy consumption in buildings

In the thermal energy consumption the water heating and the network losses are not considered.

TABLE V
THERMAL ENERGY CONSUMPTION IN BUILDINGS

			2007/2008	2008/2009	2009/2010
ATC building	Thermal energy consumption	(kWh/y)	966,660.00	1,026,190.00	1,052,800.00
	Surface	(m^2)	11,350	11,350	11,350
	Thermal energy consumption / m^2	kWh/(y*m^2)	85.17	90.41	92.76
Arquata district	Thermal energy consumption / m^2	kWh/(y*m^2)	*na*	122.24	134.01
Total thermal energy consumption		kWh/(y*m^2)		212.65	226.77

TABLE VI
EMISSIONS

			2007/2008	2008/2009	2009/2010
Local emissions	Emission factor for stoichiometric gas combustion *(1)*	(kg CO_2/kWh)	0.202	0.202	0.202
	Total natural gas import	(kWh)	16,615,707.04	14,603,478.08	15,090,492.32
	Local CO_2 emissions	(t/y)	3,356.37	2,949.90	3,048.28
Imported emissions	Emission factor for Italian electrical system *(2)*	(kg CO_2/kWh)	0.614	0.614	0.614
	Electricity import	(kWh)	1,030,200.00	1,030,200.00	1,030,200.00
	Electricity export	(kWh)	3,195,829.37	2,334,087.88	2,135,593.31
	Imported electricity related CO_2 emissions	(t/y)	632.54	632.54	632.54
	CO_2 reduction related to electricity export	(t/y)	-1,962.24	-1,433.13	-1,311.25
Total CO_2 emission		(t/y)	2,026.68	2,149.32	2,369.57

(1) Analysis on emission factors in the transport sector ("Analisi dei fattori di emissione di CO2 dal settore dei trasporti"), APAT.
(2) Thermo-electric production emission factor – form Italian Greenhouse Gas Inventory 1990-2003, APAT.

5) Emissions

The overall CO_2 emissions are calculated considering the local emission and the global emissions. The local emissions are calculated considering the emissions due to the production of imported electricity and the CO_2 reduction due to the electricity export. The electricity export is equal to:

$$Export = E_{CHP} + E_{PV} - E_{ATC} \quad (2)$$

where:

- E_{CHP} is the CHP electrical production;
- E_{PV} is the production of ATC building PV system;
- E_{ATC} is ATC building electrical consumption.

The emission factor for stoichiometric gas combustion and the emission factor for Italian electrical systems are quoted respectively in [3] and [4].

IV. ECONOMIC PRELIMINARY RESULTS

As told before, Arquata is an old district in the city of Torino and Polycity project aims to improve the energy efficiency of the whole district. It is important to highlight that energy efficiency is just one of the main goals of the project, since Arquata district is characterized by council Housing. Because of the composition of Arquata district population, energy price represents one of the most important success key of the project. Therefore a very careful cost/benefit analysis is needed. In this respect, a general methodology was developed in order to evaluate the social, energetic and economic impact of POLYCITY project.

In order to collect data about the social impact of the project a monitoring of social participation before and after POLYCITY interventions in terms of perceived quality, expectations, attitudes, services usability, perceived added value, was carried out.

Measurement and analysis of economic parameters (i.e.. cost services, housing costs, employment , …) related to the district was also carried out, along with a development of the communication plan at different levels, in order to involve, inform and form "Arquata citizens" and, more generally, Torino city.

As mentioned above, the measures, carried out from 2007 to 2009, include a "tri-generation supply system" operated on natural gas, an extensive integration of photovoltaic in the buildings and several measures to reduce the buildings energy consumption such as improved insulation and utilization of low emitting glazing.

According to the economic analysis, the simple payback period of the "tri-generation supply system" is estimated in 5 years, and the pay-back period of the all project is expected in 10 years. The discounted pay-back period is expected in 12 years. Of course the time to recover the initial investment is a function of the fuel cost and of the sale price of the energy services provided by the plant, and a sensitivity analysis is required. The following Figure 8 presents effects on the payback period of the variation of "Arquata thermal revenues", that is the sum of the bills charged to the Arquata inhabitants for the heating service. The funding from European Commission contributed to sustain RES in the district (35% for CHP and 15% for PV systems) with a general reduction of the required investments.

The effects of variation of thermal revenues are analyzed in the range ±20% with respect to the value obtained applying market prices to the thermal bills. These variations affect the payback period reducing or increasing its predicted value of about 2-3 years. This analysis shows the possibility of choosing tariff plans for the heating service which take into account possible discount like subsidies on the basis of the economic and social status of inhabitants.

V. MAIN LESSON LEARNED

The main lesson that has been learned during the Polycity project is that the key point for obtaining good efficiencies in a complex energy system is the full monitoring. The authors think that in an energy system composed by several and different production systems with a lot of different final users, each component should be monitored and an automatic control system should be implemented.

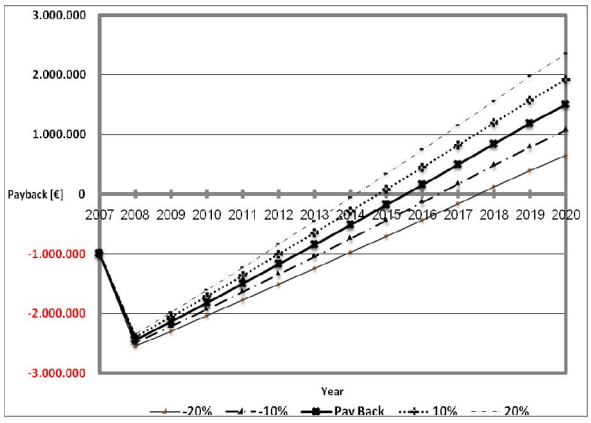

Fig. 8. Sensitivity analysis: Polycity project payback (Arquata revenues variation).

In the Italian Polycity project, due to budget limitation and to technical constraints of the existing district structure, only a few installations are monitored (CHP) and in many cases the only monitoring available is performed by means of the instruments used to evaluate the bills of energy consumption (electric and thermal) not suitable for measuring purposes.

Also the designed control of the whole energy system has not been accepted by the managers of the involved Energy Service Company. A further difficulty has been found in the evaluation of the installed PV systems. They are installed without a monitoring system and, in many periodical inspections some of them have been found disconnected from the electrical network with the consequent loss of energy production and no information on the possible causes of this disconnection. A simple monitoring system could compare actual and expected energy production (as shown in Figure 7) could avoid to waste electric energy production.

The Polycity project dedicated many efforts to get its social acceptance from the district inhabitants but a very poor attention was spent to disseminate simple and practical information on the control of each flat microclimate quantities (temperature and relative humidity) in order to reduce energy consumption getting satisfactory conditions. A sample of 30 flats showed an increase of the energy consumption mainly due to a wrong control of the energy system. A deeper analysis is also necessary to evaluate the energetic cost of the hot water distribution in the district when CHP does not work (night time). A rough sensitivity of people is also diffused among the employees of the office building which needs to know better which are the most comfortable conditions to work and must be proud to limit as much as possible the energy waste. Continuous indications of room conditions may help all the persons involved to improve their behavior by the point of view of the energy use.

VI. Conclusions

We can conclude that Polycity project seems to achieve its goals in terms of increasing the use of renewable sources and of the possible reduction of energy consumption and of its cost for the weakest citizens. The first advantages of the performed investments are expected after the current year (2011) because after the realization of the most important investments (between 2007 and 2008) an accurate tuning was necessary (2009-2010) and, in the authors opinion, it has not yet been completed.

Acknowledgments

This paper presents some results concerning the European Project POLYCITY (6 FP—Priority 6.1, Sustainable Energy Systems)-TREN/05FP6EN/S07.43964/513481. Therefore, the authors would like to thank the partners of the project who cooperated in this work.

In addition, the presented results aims to help Europe to meet emission targets by achieving a significant reduction of energy consumption in European social housing in the frame of BECA Project (CIP-ICT PSP 2010-4 – GA 270981 Balanced European Conservation Approach – ICT services for resource saving in social housing).

References

[1] Guerrero J.M., Blaabjerg F., Zhelev T., Hemmes K., Monmasson E., Jemei S., Comech M.P., Granadino R., Frau J.I., "Distributed generation", IEEE Industrial Electronics Mag., March 2010, pp. 52-64.

[2] Spagnuolo G., Petrone G., Vasconcelos Araujo S., Cecati C., Fiis-Madsen E., Gubia E., Jasinski M., Knapp W., Liserre M., Rodriguez P., Teodorescu R, Zacharias P., "Renewable energy operation and conversion schemes", IEEE Industrial Electronics Magazine, March 2010, pp. 38-51.

[3] Bratcu A., Munteanu I., Bacha S., Picault D., Raison B., "Cascaded DC-DC Converter Photovoltaic Systems: power optimization issues", IEEE Trans. on Industrial Electronics, vol. 58., n. 2, February 2011, pp. 403-411.

[4] Chan F., Calleja H., "Design strategy to optimize the reliability of Grid-Connected PV systems", IEEE Transaction on Industrial Electronics, vol. 56, n. 11, November 2009, pp. 4465-4472.

[5] Anglani N., Petrecca G., "Fossil fuel and biomass fed distributed generation and utility plants: analysis of Energy and environmental performance indicators", 2nd IEEE Symposium on Power Electronics for Distributed Generation Systems, 2010, pp. 964-969.

[6] Omran W.A., Kazerani M., Slama M.M.A., "Investigation of methods for reduction of power fluctuations generated from large grid-connected photovoltaic systems", IEEE Trans. on Energy Conversion, vol. 26, n. 1, March 2011, pp. 318-327.

[7] Boljevic S., Conlon M., "Impact of Combined Heat and Power (CHP) Generation on the Fault Current level in Urban Distribution Networks (UDN), UPEC 2010, pp. 1- 5.

[8] Galvao J., Leitao S., Malheiro S., Gaio T., "Microgeneration model in energy hybrid system – cogneration and PV panels", Speedam 2010, pp 1812-1817.

[9] Gu W., Wu Z., Yuan X., "Microgrid economical optimal operation of the combined heat and power system with renevable energy", 2010 IEEE Power and Energy Society General Meeting, pp. 1-6.

[10] Canova A., Giaccone L., Spertino F., Tartaglia M., " Electrical Impact of Photovoltaic Plant in Distributed Network", *IEEE Transactions on Industry Applications*, Vol. 45, No. 1, Jan./Feb. 2009, pp. 34-347.

[11] A. Canova, C. Cavallero, F. Freschi, L. Giaccone, M. Tartaglia, "Optimal Energy management", *IEEE Industry Applications Magazine*, March/April 2009, pp. 62-65.

[12] "Analysis on emission factors in the transport sector" ("Analisi dei fattori di emissione di CO2 dal settore dei trasporti"), APAT.

[13] "Thermo-electric production emission factor – form Italian Greenhouse Gas Inventory 1990-2003", APAT.

[14] Till Jenssen, Bastian Rühle, "Definition of environmental, economic, and sociological indicators", Report from Polycity Project.