POLITECNICO DI TORINO
Repository ISTITUZIONALE

Iterative SIC receiver scheme for non-orthogonally superimposed signals on top of OFDMA

Original
Iterative SIC receiver scheme for non-orthogonally superimposed signals on top of OFDMA / Rueegg, A.; Tarable, Alberto. - STAMPA. - (2010), pp. 156-161. (Intervento presentato al convegno IEEE Personal, Indoor and Mobile Radio Communication Conference tenutosi a Istanbul (Turkey) nel September 2010) [10.1109/PIMRC.2010.5671952].

Availability:
This version is available at: 11583/2421941 since: 2016-11-25T13:57:03Z

Publisher:

Published
DOI:10.1109/PIMRC.2010.5671952

Terms of use:

This article is made available under terms and conditions as specified in the corresponding bibliographic description in the repository

Publisher copyright
IEEE postprint/Author's Accepted Manuscript

©2010 IEEE. Personal use of this material is permitted. Permission from IEEE must be obtained for all other uses, in any current or future media, including reprinting/republishing this material for advertising or promotional purposes, creating new collecting works, for resale or lists, or reuse of any copyrighted component of this work in other works.

(Article begins on next page)

12 October 2024

Iterative SIC receiver scheme for non-orthogonally superimposed signals on top of OFDMA

Andreas Rüegg
Bell Labs
Alcatel-Lucent
Stuttgart, Germany
andreas.rueegg@alcatel-lucent.com

Alberto Tarable
Politecnico di Torino - DELEN
Torino, Italy
alberto.tarable@polito.it

***Abstract*—In this paper, we propose an iterative SIC receiver architecture with pilot- and data-based channel estimation for efficient decoding of non-orthogonal superimposed signals. The non-orthogonal superposition concept on top of OFDMA is a promising technique to improve cell spectral efficiency. In the cellular case, where users with significant path loss are superimposed by an intelligent scheduler, the SIC multi-user receiver scheme is well adapted for user signal separation. Based on the proposed receiver, we show the performance by means of multi-link link-level simulations in a realistic OFDMA uplink system including channel estimation based on real pilot patterns.**

Keywords- Non-orthogonal superposition; iterative SIC receiver; multi-user; iterative channel estimation; MMSE; OFDMA;

I. INTRODUCTION

Improving cell spectral efficiency in cellular wireless networks is of great importance to serve the increasing data rate demands in wireless broadband access. Whereas single-link communication can be provided at rates very close to the Shannon capacity, fairness drives cell spectral efficiency down, due to the many users that have to be served at the cell edge, with generally bad channel conditions, causing a relevant waste of resources.

As a possible mean to overcome this problem, non-orthogonal superposition, as proposed in [1], can significantly improve the cell throughput without the need for additional antennas and with very small feedback and channel information as it depends on long-term channel statistics only. Basically, the concept relies on OFDMA, which is the common multiple-access scheme of most recent standards (e.g. LTE, WiMAX), and superimposes several signals from/to different users on the same radio resources (time-frequency resource in a frame) at the same time. At the receiver, the signals are distinguished according to their received powers and, possibly, also on their modulation and coding schemes. In this way, the main problem of wireless access, i.e., the so-called near-far effect [2], is turned to an advantage to be exploited to increase cell throughput.

To decode the superimposed signals, a low complexity, high performance receiver is needed. In this case, particularly suited for the system under study is the successive interference cancellation (SIC) receiver, which is known to be capacity-achieving [3] and to grant almost optimal performance in the case of asymmetric received power of the interferers, especially when coupled with a powerful channel decoding technique, like turbo or LDPC codes.

In this paper, we combine the idea of turbo equalization [4], [5] with the ordered SIC approach, similar to the one introduced for MIMO decoding in [7]. In our scheme, ordered successive interference cancellation will remove inter-user interference. Essentially, the scheme is akin to the one in [8], but with a different scheduling of operations. In every iteration, only one decoder is called, the one corresponding to the strongest user not yet decoded. This allows a reduction of complexity w.r.t. [8], with a negligible performance loss, if the channel decoder is powerful enough.

The turbo-like information exchange also serves the purpose of channel estimation improvement. Soft information fed back from the channel decoders to the channel estimator allows combined pilot- and data- based channel estimation to improve performance when iterating over the SIC scheme.

We recapitulate the non-orthogonal superposition scheme briefly in section II. The receiver architecture is described in section III and evaluated in section IV. Throughout the paper, boldface upper- and lower-case letters will represent matrices and vectors, respectively. $\mathbf{I}_N$ is the identity matrix with size N. $\mathbf{M}^T$ and $\mathbf{M}^H$ mean the transpose and conjugate transpose of $\mathbf{M}$, respectively.

II. THE NON-ORTHOGONAL SUPERPOSITION MODEL

Non-orthogonal superposition such as described in [1] can be applied in uplink as well as in downlink. In this work we evaluate the performance in uplink, where K users transmit at the same time on the same OFDMA resources with complete overlap of their baseband transmit symbols $x_k[i]$ where i is the complex transmit symbol index and k the user index with $1 \le k \le K$. Each symbol $x_k[i]$ belongs to one of the 2^M-QAM constellation points s_n for $1 \le n \le 2^M$. Even though the system can be extended to multiple antennas, in order to show the isolated gains of non-orthogonal superposition, we consider a single-antenna setup. Assuming a time invariant channel for the duration of one OFDM symbol, so that we can neglect inter-carrier interference, we can formulate the baseband receive symbol as

$$y[i] = \mathbf{h}^T[i]\mathbf{x}[i] + n[i] \quad (1)$$

where $n[i]$ is zero-mean, complex circularly-distributed white Gaussian noise with variance σ^2 per real dimension, $\mathbf{x}[i] = [x_1[i], x_2[i], ..., x_K[i]]^T$ is the vector of all user's transmit symbols and $\mathbf{h}[i] = [h_1[i], h_2[i], \ldots, h_K[i]]$ is the channel vector. Equation (1) shows the situation on one particular OFDMA resource where the different user's signals are non-orthogonally superimposed in the wireless channel due to the common resources they use and perfect synchronization.

III. RECEIVER ARCHITECTURE

Figure 1 shows the architecture of the iterative SIC structure that shall be used to decode the superimposed user's signals. User signals are decoded sequentially (one signal in every iteration) following a decoding order. After having decoded all users (K iterations) the receiver starts over with the first one again, in a round-robin fashion. In this paper we take the receive signal-to-noise-ratio (SNR) as sorting criteria (the user's signal with strongest receive SNR is decoded first). The decoding itself is teamwork of the LLR computer and the channel decoders who exchange soft bit information, which is also shared by the channel estimator who improves sequentially the channel estimates needed by the LLR computer. In each iteration, one user's signal is decoded. In a more general setup, different user's signals could be decoded using different channel decoders.

A. LLR Computer

The LLR computer of Figure 1, which is described in detail in [7] in the context of MIMO systems, performs soft-output demodulation and demapping, in order to deliver soft bit information to the channel decoders. Considering the k -th user's receive signal as the signal-of-interest, we can rewrite (1) in the following form:

$$y[i] = h_k[i]x_k[i] + \sum_{l \neq k} h_l[i]x_l[i] + n[i] \quad (2)$$

where the term containing the signal-of-interest has been separated from the other users' term, which becomes multi-access interference (MAI). The LLR computer outputs soft bit information, in the form of log-likelihood ratios (LLRs) as defined by

$$LLR_k[i,j] = \log \frac{p(y[i] \mid b_k[i,j] = 0)}{p(y[i] \mid b_k[i,j] = 1)} \quad (3)$$

where $b_k[i,j]$ is the j-th bit, $1 \le j \le M$, associated to the k-th user's i-th symbol. Optimal demodulation of (3) would require a complexity growing exponentially with the number of users. To decrease this computational burden, we invoke the Gaussian Approximation (GA). The GA models y with a Gaussian distribution:

$$y[i] \approx h_k x_k[i] + \nu_k[i] \quad (4)$$

where $\nu_k[i]$ represents the interference-plus-noise part and is assumed Gaussian-distributed with mean $\mu_k[i]$ and variance $\rho_k^{\,2}[i]$. At a given iteration, these values depend on the current a-priori distribution of the interferers' symbols, which, except for the first iteration, is derived from the feedback information coming from the channel decoders and computed in the previous iteration. Their expressions can easily be derived:

$$\mu_k[i] = \sum_{l \neq k} h_l[i]\tilde{x}_l[i] \quad (5)$$

$$\rho_k[i] = \sigma^2[i] + \sum_{l \neq k} |h_l[i]|^2 \operatorname{var}(x_l[i]) \quad (6)$$

where

$$\tilde{x}_k[i] \equiv E[x_k[i]] = \sum_{n=1}^{2^M} \Pr\{x_k[i] = s_n\} \cdot s_n \quad (7)$$

and

$$\operatorname{var}(x_k[i]) = \sum_{n=1}^{2^M} \Pr\{x_k[i] = s_n\} \cdot |s_n|^2 - |\tilde{x}_k[i]|^2 \quad (8)$$

$\Pr\{x_k[i] = s_n\}$ being the feedback information from the channel decoders. In the first iteration, when no feedback information is available, $\Pr\{x_k[i] = s_n\} = 1/2^M$ for every n. Each complex symbol $x_k[i]$ carries M bits and the LLR of user k for the j -th bit carried by the i -th symbol can then be written like

$$LLR_k[i,j] = \log \frac{\sum_{\alpha \in S_j^{(0)}} p(y[i] \mid x_k[i] = \alpha)}{\sum_{\alpha \in S_j^{(1)}} p(y[i] \mid x_k[i] = \alpha)} \quad (9)$$

where $s_j^{(0)}$ is the set of constellation symbols where the j -th bit is 0 and $s_j^{(1)}$ is its complementary set.

With the GA and the above computed mean and variance, the probabilities yield

$$p(y[i] \mid x_k[i] = \alpha) = \frac{1}{2\pi\rho_k^{\,2}[i]} e^{-\frac{|y[i] - \mu_k[i] - h_k[i]\alpha|^2}{2\rho_k^{\,2}[i]}} \quad (10)$$

Applying the log-sum approximation $\log \sum_i x_i \approx \max_i \log x_i$ we can further simplify the expression:

$$LLR_k[i,j] \approx \frac{1}{2\rho_k^{\,2}[i]} \left\{ \min_{\alpha \in S_j^{(1)}} \left(|\, y[i] - \mu_k[i] - h_k[i]\alpha \,|^2 \right) - \min_{\alpha \in S_j^{(0)}} \left(|\, y[i] - \mu_k[i] - h_k[i]\alpha \,|^2 \right) \right\} \tag{11}$$

The bit LLRs for the k-th user will then be taken by the corresponding channel decoder to decode the sequence and provide improved a-priori information (denoted LLR' in Figure 1) used by the LLR Computer and by the channel estimator in the next iteration.

B. Channel Estimator

The proposed OFDM channel estimator performs combined pilot- and data-based channel estimation of the frequency-domain channel coefficients and updates its estimates at every iteration of the iterative receiver, as in Figure 1. Based on pilots and on the current a-priori distribution of users' data (not available in the first iteration), the channel estimator performs linear minimum mean-square error (LMMSE) filtering. The basic LMMSE filter concept for channel estimation is inspired by [9], [10].

Assume $\mathcal{D}$ being the subset of symbol indices (i.e., of tones) describing data symbols and $\mathcal{P}$ the subset describing pilot symbols.

We consider the pilots being orthogonal across users in the time-frequency plane (i.e, the two sets of tones employed by the users to transmits pilots are disjoint) and therefore the receive signal $y[p]$ at pilot position $p \in \mathcal{P}$ of user k can be written as

$$y[p] = x_k[p]h_k[p] + n[p] \tag{12}$$

where $h_k[p]$ is the true channel coefficient, $x_k[p]$ the known pilot symbol and $n[p]$ the noise on the carrier.

The same way we can define the receive signal on the data carriers $d \in \mathcal{D}$ which is a mix of modulated data from all users and noise.

$$y[d] = x_k[d]h_k[d] + \sum_{l \neq k} x_l[d]h_l[d] + n[d] \tag{13}$$

where we implicitly defined user k as the user of interest. The estimated channel of user k at data tone i is obtained by the linear filter

$$\hat{h}_k[i] = \mathbf{c}_k^{\,H}[i]\mathbf{y}_k[i] \tag{14}$$

where the size-L vector $\mathbf{y}_k[i]$ is constructed by selecting different pilot and data tones, useful to estimate the k-th user's i-th channel coefficients, and filling the vector with the corresponding received signals. Let us call this set of L indices Ω, where $\Omega \subseteq \mathcal{D} \cup \mathcal{P}$. $\mathbf{y}_k[i]$ contains information from receive pilot and data tones that shall contribute to the channel estimate at data tone i for user k. In WiMAX, a natural choice for $\mathbf{y}_k[i]$ could include the received signal over all pilot and data time-frequency slots of one uplink PUSC tile.

The MMSE optimization criteria can be stated as

$$\mathbf{c}_k[i] = \arg\min_{\mathbf{c} \in \mathbf{C}^L} E\{|\, h_k[i] - \mathbf{c}^H \mathbf{y}_k[i] \,|^2\} \tag{15}$$

and its solution is given by the Wiener filter:

$$\mathbf{c}_k[i] = (E\{\mathbf{y}_k[i]\mathbf{y}_k^{\,H}[i]\})^{-1} E\{\mathbf{y}_k[i]h^*_k[i]\} \tag{16}$$

where after some calculation, $\mathbf{c}_k[i]$ can also be written as

$$\mathbf{c}_k[i] = \left(\sum_{l=1}^{K} \tilde{\mathbf{X}}_l[i]\tilde{\mathbf{R}}_l[i]\tilde{\mathbf{X}}_l^{\,H}[i] + \sigma^2 \mathbf{I} \right)^{-1} \tilde{\mathbf{X}}_k[i]\mathbf{r}_k[i] \tag{17}$$

where:

- $\tilde{\mathbf{R}}_k[i]$ is the $L \times L$ autocorrelation matrix of the channel of user k at indices in Ω,
- $\mathbf{r}_k[i]$ is the cross-correlation vector of user k containing correlations between the subcarrier at index i and all the subcarriers at the indices of the set Ω. If i is part of Ω, $\mathbf{r}_k[i]$ is the column of matrix $\tilde{\mathbf{R}}_k[i]$ relative to subcarrier i.
- $\tilde{\mathbf{X}}_k[i]$ is the diagonal matrix with the soft estimates of transmitted symbols (and the known pilot symbols) of user k at subcarrier indices in Ω (based on the previous iteration). In the interfering transmit symbol diagonal matrices $\tilde{\mathbf{X}}_l[i]$ for $l \neq k$, there are zeros at pilot positions of user k in the case of orthogonal pilots between user l and user k (because user l has transmitted nothing).

If data and pilots have different transmit power (e.g. due to pilot boosting), this has to be taken into account in the estimated transmit symbols matrices $\tilde{\mathbf{X}}_k[i]$.

While $\tilde{\mathbf{X}}_k[i]$ is obtained by the channel decoders, the value of $\tilde{\mathbf{R}}_k[i]$ must be computed inside the channel estimator block. In practice, it can be obtained heuristically from the received data itself. However, in the simulations whose results are shown in the next section, the value of $\tilde{\mathbf{R}}_k[i]$ is ideally

computed, based on the channel statistics supposed to be known. Let

$$g_k(t) = \sum_{p=0}^{P-1} g_{k,p}(t)\delta\left(t-\tau_p\right) \tag{18}$$

be the time-domain channel impulse response, where P is the number of paths, $g_{k,p}(t)$ is the gain and τ_p is the delay of the p-th path. The path amplitudes are supposed to be independent, and let $\sigma^2{}_p$ be the power of the p-th path. Rayleigh fading is supposed. If $\mathbf{h}_k[n]$ is the set of frequency-domain channel coefficients for the N subcarriers at the n-th OFDM symbol, as seen by the k-th user, then

$$\mathbf{h}_k[n] = \mathbf{F}^H \mathbf{g}_k[n] \tag{19}$$

where $\mathbf{F} = \left\{e^{j2\pi l\Delta f \tau_p}\right\}_{\substack{l=0,\ldots,N-1 \\ p=o,\ldots,P-1}}$ is the Fourier transform matrix, Δf being the subcarrier frequency spacing, and $\mathbf{g}_k[n]$ is the vector of sampled path gains in the n-th OFDM symbol. Then, within one OFDM symbol

$$\mathbf{R}_k[0] = E[\mathbf{h}_k[n]\mathbf{h}^H{}_k[n]] = \mathbf{F}^H E[\mathbf{g}_k[n]\mathbf{g}^H{}_k[n]]\mathbf{F} \tag{20}$$

where the time-domain autocorrelation matrix is a diagonal matrix with the path powers on the diagonal, thanks to the independence between paths:

$$E[\mathbf{g}_k[n]\mathbf{g}^H{}_k[n]] = \mathrm{diag}\left(\sigma_0^2,\ldots,\sigma_{P-1}^2\right) \tag{21}$$

Across different OFDM symbols, we will assume a Jakes' model for the power spectral density of the path gains. Thus, if $f_{k,d}$ is the k-th user's Doppler frequency, the autocorrelation between path gain samples can be written as:

$$E[g_{k,p}[n]g^*{}_{k,p}[n']] = \sigma^2{}_p \, \mathrm{J}_0\left(2\pi(n-n')f_{k,d}T\right) \tag{22}$$

where:

- $g_{k,p}[n]$ is the p-th path gain sample at the n-th OFDM symbol,
- $\mathrm{J}_0(\cdot)$ is the zero order Bessel function of the first kind, and
- T is the OFDM symbol duration (including cyclic prefix).

Thus, thanks to (19) and (22), the crosscorrelation between frequency-domain channel coefficients in different OFDM symbols becomes:

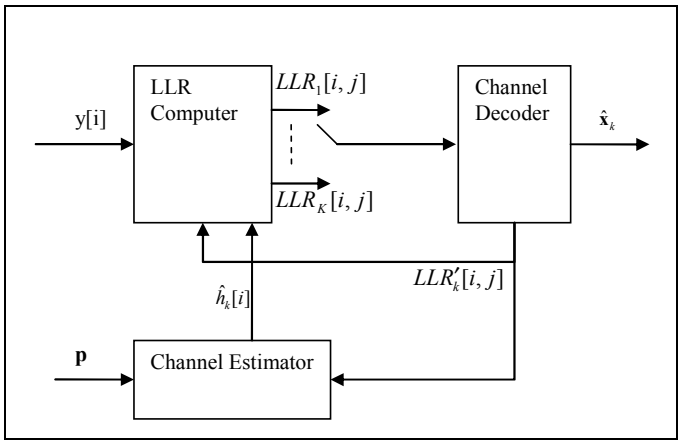

Figure 1. Iterative SIC receiver structure

$$\begin{aligned}\mathbf{R}_k[n-n'] &= E[\mathbf{h}_k[n]\mathbf{h}^H{}_k[n']] = \mathbf{F}^H E[\mathbf{g}_k[n]\mathbf{g}^H{}_k[n']]\mathbf{F} \\ &= \mathrm{J}_0\left(2\pi(n-n')f_{k,d}T\right)\mathbf{R}_k[0]\end{aligned} \tag{23}$$

In conclusion, the explicit expression of the correlation between the frequency-domain channel coefficients at subcarrier l, OFDM symbol n and subcarrier l', OFDM symbol n' is given by:

$$E[h_k[l,n]h_k^*[l',n']] = \mathrm{J}_0\left(2\pi(n-n')f_{k,d}T\right)\sum_{p=0}^{P-1}\sigma^2{}_p e^{j2\pi(l'-l)\Delta f\tau_p} \tag{24}$$

IV. SIMULATION RESULTS

The simulations are carried out in a WiMAX (IEEE 802.16e) uplink setup where two users transmit on the same resources in the OFDMA frame at the same time using one antenna. The transmit bandwidth is 10MHz at 2.5GHz carrier frequency using a 1024 point FFT (10.94kHz subcarrier spacing). The fading channel is modeled following the ITU Pedestrian B model. The two users are attributed the uplink PUSC scheme with orthogonal two user pilot patterns. The modulation and coding schemes (MCS) are standard compliant. Each mobile station and the receiving base station uses only one transmit/receive antenna. No other users than the two superimposed ones are creating interference.

The plots show packet error rate (PER) vs SNR of the weak user since in the operation points of interest its performance is usually worse than the strong user performance. This is due to the close dependency of the weak user on the strong user performance. We compare the weak user performance for various SNR differences between the two users and take the single-user performance (absence of a superimposed stronger user) as base line reference.

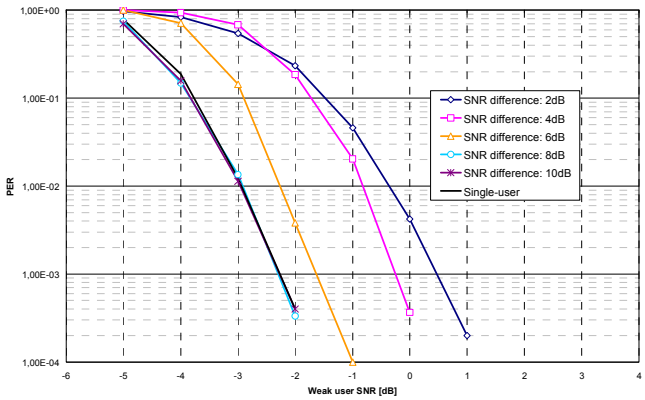

Figure 2. Weak user performance with perfect channel knowledge in Pedestrian B, 3km/h channel; 10 iterations

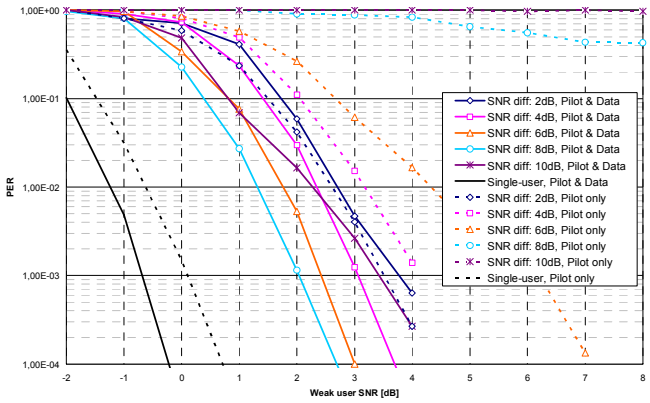

Figure 3. Weak user performance with pilot- and data-based channel estimation in Pedestrian B, 3km/h channel; 10 iterations

In the two presented plots we show the performance with and without perfect channel knowledge at the receiver. In the latter case we provide the simulation results for purely pilot based channel estimation (dashed lines) as well as the combined pilot & data based channel estimation proposed in III.B (straight lines). For both figures we use the scenario where the weak user modulates with QPSK, coding rate 1/2 and repetition coding factor 4, whereas the strong user modulates with QPSK, coding rate 1/2.

Figure 2 demonstrates the receiver performance in presence of perfect channel knowledge at the receiver. It can be seen that SNR differences around 8dB and bigger lead to the best possible performance which is the single-user performance.

In Figure 3 we consider no channel knowledge at the receiver (besides channel statistics used for channel estimation like described in III.B). To discuss the mutual impact between strong and weak user, we will distinguish the following two cases:

A. At *high* SNR difference, even relatively small errors in the strong user's channel estimate become large when considered with respect to the weak user's signal power. These errors cause considerable degradation in both cases, pilot-only channel estimation and pilot & data channel estimation.

B. At *low* SNR difference, the two channel estimation methods lead to different weak user performance figures. More precisely, while for pilot & data channel estimation there is an optimal SNR difference lying around 8 dB, for pilot-only channel estimation performance improves monotonically with decreasing SNR difference. To understand this behaviour, notice that with the simulated modulation and coding scheme, at a low enough SNR difference the weak user's signal becomes more likely to be decoded correctly than the strong user's one, because its signal is better protected against errors. Simulation outcomes for the strong user show that this effect is getting important below approximately 4dB SNR difference. This means that, from a system performance perspective the regime of SNR difference below 4dB is not meaningful anymore.

The different behaviour is then explained by considering that pilot & data channel estimation tightly couples the performance of the two users, so that the weak user performance shows a degradation actually resulting from erroneous strong user decoding. Instead, in the pilot-only channel estimation case (with orthogonal users' pilots) the weak user does not suffer so much from the strong user's performance degradation.

From an overall performance point of view we can say that by using the proposed MMSE pilot & data based channel estimation method we significantly improve the minimum SNR that is needed at the receiver to decode the weak user's signal. Further, we notice that the degradation of the weak user's signal decoding performance when superimposing it with a strong user is significantly reduced compared to the pilot-only channel estimation approach. Additionally, we observe an optimal SNR difference value around 8dB in the pilot & data based channel estimation approach revealing the importance of precise scheduling and user pairing to maximize performance on system level.

V. CONCLUSION

In this paper, we have proposed an iterative SIC receiver architecture with combined, pilot & data based channel estimation for efficient decoding of non-orthogonally superimposed signals.

The receiver, akin in the spirit to iterative turbo-like receivers has been proven, through simulations, to have a good performance under a reasonable complexity.

Future work will extend the investigations to high-mobility scenarios, when the effect of inter-carrier interference adds to the effect of imperfect channel estimation, in which case a crucial role is assigned to the optimal choice of the SNR difference between superimposed users and the channel estimation quality.

ACKNOWLEDGMENT

The research leading to these results has received funding from the European Community's Seventh Framework Programme under grant agreement n 215167, project WiMAGIC.

REFERENCES

[1] J. Schaepperle, and A. Rüegg, "Enhancement of throughput and fairness in 4G wireless access systems by non-orthogonal signaling," *Bell Labs Technical Journal*, Winter 2009, Volume 13, Number 4, pp. 59-77.

[2] S. Verdu, *Multiuser detection*, Cambridge University Press, 1998

[3] D. Tse and P. Viswanath, *Fundamentals of Wireless Communication*, Cambridge University Press, 2005

[4] D. Raphaeli, Y. Zarai, "Combined Turbo Equalization and Turbo Decoding*", IEEE Communications Letters*, pp 107-109, Apr. 98.

[5] R. Koetter, A. C. Singer, and M. Tüchler, "Turbo equalization," *IEEE Signal Processing Mag.*, vol. 21, no. 1, pp. 67-80, Jan 2004.

[6] P. W. Wolniansky, G. J. Foschini, G. D. Golden and R. A. Valenzuela, "V-BLAST: An Architecture for Realizing Very High Data Rates Over the Rich-scattering Wireless Channel," in *Proc. ISSSE*, Pisa, Italy, Sept. 1998.

[7] A. Tarable, G. Montorsi, and S. Benedetto, "A suboptimum iterative decoder for space-time trellis codes," *Proc. IEEE Int. Conf. Commun.*, (Paris, France), pp. 3000-3004, June 2004.

[8] A. Tarable, G. Montorsi, and S. Benedetto, "A linear front-end for iterative soft interference cancellation and decoding in coded CDMA," *IEEE Trans. on Commun.*, 2005

[9] J. van de Beek, O. Edfors, M. Sandell, S. K. Wilson, and P. O. Börjesson, "On channel estimation for OFDM systems," *Proc. of the Vehicular Technology Conf.*, Chicago, vol. 2, pp. 815-819, Jul 1995

[10] M. Sandell, O. Edfors, "A Comparative Study of Pilot-Based Channel Estimators for Wireless OFDM," Research Report, Luleå University of Technology, Sep 1996.