POLITECNICO DI TORINO
Repository ISTITUZIONALE

Stochastic Evaluation of Parameters Variability on a Terminated Signal Bus

Original
Stochastic Evaluation of Parameters Variability on a Terminated Signal Bus / Manfredi, Paolo; Stievano, IGOR SIMONE; Canavero, Flavio. - STAMPA. - (2011), pp. 362-367. (Intervento presentato al convegno 10th International Symposium on Electromagnetic Compatibility tenutosi a York (UK) nel September 26-30).

Availability:
This version is available at: 11583/2448579 since:

Publisher:
Piscataway, N.J. : IEEE

Published
DOI:

Terms of use:

This article is made available under terms and conditions as specified in the corresponding bibliographic description in the repository

Publisher copyright

(Article begins on next page)

12 October 2024

Stochastic Evaluation of Parameters Variability on a Terminated Signal Bus

Paolo Manfredi, Igor S. Stievano, Flavio G. Canavero
Dipartimento di Elettronica, Politecnico di Torino
10129 Torino, Italy
Email: {paolo.manfredi,igor.stievano,flavio.canavero}@polito.it

***Abstract*—This paper addresses the simulation of the effects on a high-speed data link of external factors due to fabrication tolerances or uncertain loading conditions. The proposed strategy operates in the frequency domain and amounts to generating a suitable set of stochastic models for the different blocks in which the data link can be decomposed. Each model is based on the expansion of the block chain parameter matrix in terms of orthogonal polynomials. This method turns out to be accurate and more efficient than alternative solutions like the Monte Carlo method in determining the system response sensitivity to parameters variability. The advantages of the proposed approach are demonstrated via the stochastic simulation of a PCB application example.**

***Index Terms*—Stochastic analysis, Tolerance analysis, Uncertainty, Circuit modeling, Circuit simulation, Transmission lines.**

I. Introduction

Nowadays, simulation techniques allowing for the analysis of interconnects with the inclusion of the effects of possible uncertainties of the circuit parameters are highly desirable, in view of the urging necessity to perform right-the-first-time designs. The stochastic analysis is a tool that is extremely useful in the early design phase for the prediction of the system performance and for setting realistic design margins. A relevant example is provided by the process-induced variability that unavoidably affects the geometrical and material properties of interconnects [1]. The manufacturing process introduces sources of uncertainty that impact on the performance of PCB planar structures and may cause significant differences between simulated and measured responses, like higher crosstalk levels, thus possibly causing violations of noise margins. Also, the choice of components terminating the interconnects is critical, since their characteristics and parasitics may influence the system performance. Simulation and verification of such systems is fundamental for discovering and correcting problems and avoiding very expensive re-fabrication.

The typical resource allowing to collect quantitative information on the statistical behavior of the circuit response is based on the application of the brute-force Monte Carlo (MC) method, or possible complementary methods based on the optimal selection of the subset of model parameters in the whole design space. Such methods, however, are computationally expensive, and this fact prevents us from their application to the analysis of complex realistic structures.

Recently, an effective solution that overcomes the previous limitation, has been proposed. This methodology is based on the polynomial chaos (PC) theory and on the representation of the stochastic solution of a dynamical circuit in terms of orthogonal polynomials. For a comprehensive and formal discussion of PC theory, the reader is referred to [2], [3] and references therein; also, it should be pointed out that the word *chaos* is used in the sense originally defined by Wiener [4] as an approximation of a Gaussian random process by means of Hermite polynomials. PC technique enjoys applications in several domains of Physics; we limit ourselves to mention recent results on the extension of the classical modified nodal analysis (MNA) approach to the prediction of the stochastic behavior of circuits with uncertain parameters [5]. Also, the authors of this contribution have recently proposed an extension of PC theory to distributed structures described by transmission-line equations [6].

This paper further extends the PC theory to the stochastic simulation of a realistic interconnected structure consisting in a cascade of distributed multiconductor interconnects and lumped multiport circuits. The proposed approach allows to predict the effects of uncertainties on either line parameters or load conditions.

II. Polynomial Chaos Primer

The idea underlying the PC technique is the spectral expansion of a stochastic function (intended as a given function of a random variable) in terms of a truncated series of orthogonal polynomials. Within this framework, a function H, that in our specific application will be the expression of the parameters and the resulting frequency-domain response of an interconnected structure, can be approximated by means of the following truncated series

$$H(\xi) = \sum_{k=0}^{P} H_k \cdot \phi_k(\xi), \tag{1}$$

where $\{\phi_k\}$ are suitable orthogonal polynomials expressed in terms of the random variable ξ. The above expression is defined by the class of the orthogonal bases, by the number of terms P (limited to the range $2 \div 5$ for practical applications) and by the expansion coefficients H_k. The choice of the orthogonal basis relies on the distribution of the random variables being considered. The tolerances given in

product documentation and datasheets are usually expressed in terms of minimum, maximum and typical values. Since the actual distribution is generally unknown, a reasonable assumption is to consider the parameters as random variables with uniform distribution between the minimum and maximum values. Hence, the most appropiate orthogonal functions for the expansion (1) are the Legendre polynomials, the first three being $\phi_0 = 1$, $\phi_1 = \xi$ and $\phi_2 = (\frac{3}{2}\xi^2 - \frac{1}{2})$, where ξ is the normalized uniform random variable with support $[-1, 1]$. It is relevant to remark that any random parameter in the system, e.g., the substrate permittivity ε_r, can be related to ξ as follows

$$\varepsilon_r = \frac{b+a}{2} + \frac{b-a}{2}\xi, \tag{2}$$

where a and b are the minimum and maximum values assumed by the parameter, respectively. The orthogonality property of Legendre polynomials is expressed by

$$< \phi_k, \phi_j >=< \phi_k, \phi_k > \delta_{kj}, \tag{3}$$

where δ_{kj} is the Kronecker delta and $< \cdot, \cdot >$ denotes the inner product in the Hilbert space of the variable ξ with uniform weighting function, i.e.,

$$< \phi_k, \phi_j >= \frac{1}{2}\int_{-1}^{1} \phi_k(\xi)\phi_j(\xi)d\xi. \tag{4}$$

With the above definitions, the expansion coefficients H_k of (1) are computed via the projection of H onto the orthogonal components ϕ_k. It is worth noting that relation (1), which is a known nonlinear function of the random variable ξ, can be used to predict the probability density function (PDF) of $H(\xi)$ via numerical simulation or analytical formulae [7]. The basic results of PC theory outlined above can be extended to the case of multiple independent random variables. However, for the sake of brevity, the formal development (consisting in the application of orthogonality relations to build higher dimensional polynomials as the product combination of polynomials in one variable) is omitted here.

III. Stochastic Simulation of Interconnected Structures

This Section summarizes the proposed procedure for the stochastic simulation of a complex interconneted structure like the one shown in Fig. 1. The depicted scheme provides an exemplification of a typical high-speed data link composed of a transmitter (represented by the Thevenin sources on the left) driving a distributed – possibly multiconductor – interconnect terminated by digital receivers encapsulated in a package (here the receivers are assumed linear and simply described by their $Z_{L1,2}$ input impedances, and the package is represented by a RLC network taking into account pin parasitics).

Specifically, the goal of this work is to analyze and compare the effects of variability alternatively provided by one of the two inner blocks composing the structure. Therefore, two cases with two different sources of variability will be considered: (i) the line has deterministic geometrical and material properties corresponding to their nominal values, while the randomness is provided by the values of the pin parasitics; (ii) the pin parasitics are assumed to have their typical values, while the transmission-line parameters are supposed to be stochastic.

The proposed strategy is the following: (a) generate extended stochastic models for the different parts composing the cascaded stucture that will be able to include the effects of the statistical variation of model parameters; (b) simulate the entire structure in the frequency domain by suitably concatenating these models. The proposed extended models are obtained by expanding the characteristics of the different circuit elements involved in the scheme of Fig. 1 according to (1).

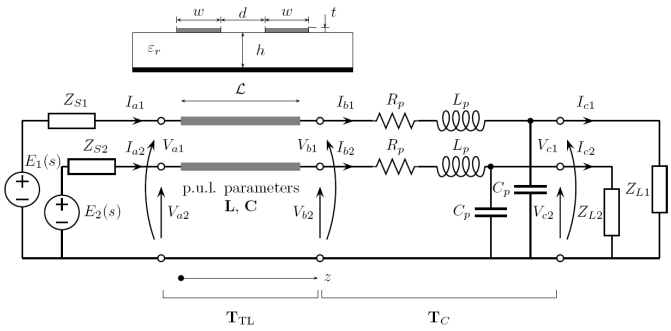

Fig. 1. Coupled microstrip test structure used to demonstrate the proposed approach. Top panel: microstrip cross-section; bottom panel: simulation test case.

A. Stochastic Model for Distributed Lines

For the sake of simplicity, the discussion is based on a lossless three-conductor line, as the coupled microstrip structure shown in Fig. 1 (top panel), in presence of a single random parameter. The wave propagation on this distributed part of the structure is governed by the telegraphers equation in the Laplace domain [8]

$$\frac{d}{dz}\begin{bmatrix} \mathbf{V}(z,s) \\ \mathbf{I}(z,s) \end{bmatrix} = -s\begin{bmatrix} 0 & \mathbf{L} \\ \mathbf{C} & 0 \end{bmatrix}\begin{bmatrix} \mathbf{V}(z,s) \\ \mathbf{I}(z,s) \end{bmatrix}. \tag{5}$$

In the above equation, s is the Laplace variable, $\mathbf{V} = [V_1(z,s), V_2(z,s)]^T$ and $\mathbf{I} = [I_1(z,s), I_2(z,s)]^T$ are vectors collecting the voltage and current variables along the multiconductor line (z coordinate) and $\mathbf{C}$ and $\mathbf{L}$ are the p.u.l. capacitance and inductance matrices, depending on the geometrical and material properties of the structure.

The solution of a transmission-line equation like (5) is given by the combination of its chain parameter matrix (CPM), that writes

$$\mathbf{T}_{\mathrm{TL}}(\mathcal{L}, s) = \mathrm{expm}\left(-s\begin{bmatrix} 0 & \mathbf{L} \\ \mathbf{C} & 0 \end{bmatrix}\mathcal{L}\right), \tag{6}$$

where expm denotes the matrix exponential, with the boundary conditions defined by the port electrical relations of the terminal elements defining the source and the load. The CPM

relates voltages and currents at the two extremities of the block, i.e,

$$\begin{bmatrix} \mathbf{V}(\mathcal{L},s) \\ \mathbf{I}(\mathcal{L},s) \end{bmatrix} = \begin{bmatrix} \mathbf{T}_{\mathrm{TL},11}(\mathcal{L},s) & \mathbf{T}_{\mathrm{TL},12}(\mathcal{L},s) \\ \mathbf{T}_{\mathrm{TL},21}(\mathcal{L},s) & \mathbf{T}_{\mathrm{TL},22}(\mathcal{L},s) \end{bmatrix} \begin{bmatrix} \mathbf{V}(0,s) \\ \mathbf{I}(0,s) \end{bmatrix}. \quad (7)$$

By considering that $z = 0$ and $z = \mathcal{L}$ correspond to the sections indicated in Fig. 1 with a and b, respectively, and by defining for notation convenience $\mathbf{X}_{a,b}(s) = [\mathbf{V}_{a,b}(s), \mathbf{I}_{a,b}(s)]^T$, (7) can be rewritten as

$$\mathbf{X}_b(s) = \mathbf{T}_{\mathrm{TL}}(\mathcal{L},s)\mathbf{X}_a(s). \quad (8)$$

When the problem becomes stochastic, in order to account for the uncertainties affecting the guiding structure, we must consider the p.u.l. parameters as random quantities, with entries depending on the random variable ξ. In turn, (5) becomes a stochastic differential equation, leading to randomly-varying voltages and currents along the line.

The expansion (1) of the p.u.l parameters and of the unknown voltage and current variables in terms of Legendre polynomials, yields a modified version of (5), whose second row becomes

$$\begin{aligned} &\tfrac{d}{dz}(\mathbf{I}_0(z,s)\phi_0(\xi) + \mathbf{I}_1(z,s)\phi_1(\xi) + \mathbf{I}_2(z,s)\phi_2(\xi)) = \\ &-s(\mathbf{C}_0\phi_0(\xi) + \mathbf{C}_1\phi_1(\xi) + \mathbf{C}_2\phi_2(\xi))(\mathbf{V}_0(z,s)\phi_0(\xi) + \\ &+\mathbf{V}_1(z,s)\phi_1(\xi) + \mathbf{V}_2(z,s)\phi_2(\xi)), \end{aligned} \quad (9)$$

where a second-order expansion (i.e., $P = 2$) is assumed; the expansion coefficients of electrical variables and of p.u.l. parameters are readily identifiable in the above equation.

Projection of (9) and of the companion relation arising from the first row of (5) on the first three Legendre polynomials leads to the following augmented system, where the random variable ξ does not appear explicitely, due to the integral projection form given in (4):

$$\frac{d}{dz}\begin{bmatrix} \tilde{\mathbf{V}}(z,s) \\ \tilde{\mathbf{I}}(z,s) \end{bmatrix} = -s\begin{bmatrix} 0 & \tilde{\mathbf{L}} \\ \tilde{\mathbf{C}} & 0 \end{bmatrix}\begin{bmatrix} \tilde{\mathbf{V}}(z,s) \\ \tilde{\mathbf{I}}(z,s) \end{bmatrix}. \quad (10)$$

In the previous equation, vectors $\tilde{\mathbf{V}} = [\mathbf{V}_0, \mathbf{V}_1, \mathbf{V}_2]^T$ and $\tilde{\mathbf{I}} = [\mathbf{I}_0, \mathbf{I}_1, \mathbf{I}_2]^T$ collect the different coefficents of the polynomial chaos expansion of the voltage and current variables. The new p.u.l. matrix $\tilde{\mathbf{C}}$ turns out to be

$$\tilde{\mathbf{C}} = \begin{bmatrix} \mathbf{C}_0 & \frac{1}{3}\mathbf{C}_1 & \frac{1}{5}\mathbf{C}_2 \\ \mathbf{C}_1 & \mathbf{C}_0 + \frac{2}{5}\mathbf{C}_2 & \frac{2}{5}\mathbf{C}_1 \\ \mathbf{C}_2 & \frac{2}{3}\mathbf{C}_1 & \mathbf{C}_0 + \frac{2}{7}\mathbf{C}_2 \end{bmatrix} \quad (11)$$

and a similar relation holds for matrix $\tilde{\mathbf{L}}$.

It is worth noting that (10) is analogous to (5) and plays the role of the set of equations of a multiconductor transmission line with a number of conductors that is $(P+1)$ times larger than those of the original line. It is ought to remark that the increment of the equation number is not detrimental for the method, since for small values of P (as typically occurs in practice), the additional overhead in handling the augmented equations is much less than the time required to run a large number of MC simulations.

As far as the solution of the stochastic problem is concerned, the augmented equation (10) is used in place of (5), as well as the corresponding CPM, that becomes

$$\tilde{\mathbf{T}}_{\mathrm{TL}}(\mathcal{L},s) = \mathrm{expm}\left(-s\begin{bmatrix} 0 & \tilde{\mathbf{L}} \\ \tilde{\mathbf{C}} & 0 \end{bmatrix}\mathcal{L}\right). \quad (12)$$

The augmented CPM relates the coefficients of the voltage and current variables (i.e., $\tilde{\mathbf{X}}_{a,b}(s) = [\tilde{\mathbf{V}}_{a,b}(s), \tilde{\mathbf{I}}_{a,b}(s)]^T$) at the line extremities.

Extension of the procedure to the general case of lossy transmission lines is straightforward, and amounts to including the resistance and conductance matrices in (5) and the corresponding augmented matrices in (10) and (12).

B. Stochastic Model for Lumped Blocks

Again, the discussion is referred to Fig. 1. The multiport equation for the RLC block writes

$$\mathbf{X}_c(s) = \mathbf{T}_C(s)\mathbf{X}_b(s), \quad (13)$$

where $\mathbf{X}_c(s) = [\mathbf{V}_c(s), \mathbf{I}_c(s)]^T$ and

$$\begin{aligned} \mathbf{T}_C(s) &= \begin{bmatrix} \mathbf{T}_{C,11}(s) & \mathbf{T}_{C,12}(s) \\ \mathbf{T}_{C,21}(s) & \mathbf{T}_{C,22}(s) \end{bmatrix} \\ &= \left[\begin{array}{cc|cc} 1 & 0 & -Z_s & 0 \\ 0 & 1 & 0 & -Z_s \\ \hline -Y_p & 0 & 1+Z_sY_p & 0 \\ 0 & -Y_p & 0 & 1+Z_sY_p \end{array}\right] \end{aligned} \quad (14)$$

with $Z_s = R_p + sL_p$ and $Y_p = sC_p$.

When we intend to include the variability of the package parameters, we must consider the RLC elements as random quantities and expand the circuit equations in terms of Legendre orthogonal polynomials. The second-order expansion of (13) yields

$$\begin{aligned} &\mathbf{X}_{c,0}\phi_0(\xi) + \mathbf{X}_{c,1}\phi_1(\xi) + \mathbf{X}_{c,2}\phi_2(\xi) = \\ &(\mathbf{T}_{C,0}\phi_0(\xi) + \mathbf{T}_{C,1}\phi_1(\xi) + \mathbf{T}_{C,2}\phi_2(\xi))(\mathbf{X}_{b,0}\phi_0(\xi) \\ &+\mathbf{X}_{b,1}\phi_1(\xi) + \mathbf{X}_{b,2}\phi_2(\xi)), \end{aligned} \quad (15)$$

that leads to the following augumented system

$$\tilde{\mathbf{X}}_c(s) = \tilde{\mathbf{T}}_C(s)\tilde{\mathbf{X}}_b(s), \quad (16)$$

where $\tilde{\mathbf{X}}_c(s) = [\tilde{\mathbf{V}}_c(s), \tilde{\mathbf{I}}_c(s)]^T$ collects the coefficients of the PC expansion of the voltage and current variables at section c. The four blocks of $\tilde{\mathbf{T}}_C$ turn out to be

$$\tilde{\mathbf{T}}_{C,ij} = \begin{bmatrix} \mathbf{T}_{C,ij,0} & \frac{1}{3}\mathbf{T}_{C,ij,1} & \frac{1}{5}\mathbf{T}_{C,ij,2} \\ \mathbf{T}_{C,ij,1} & \mathbf{T}_{C,ij,0} + \frac{2}{5}\mathbf{T}_{C,ij,2} & \frac{2}{5}\mathbf{T}_{C,ij,1} \\ \mathbf{T}_{C,ij,2} & \frac{2}{3}\mathbf{T}_{C,ij,1} & \mathbf{T}_{C,ij,0} + \frac{2}{7}\mathbf{T}_{C,ij,2} \end{bmatrix}, \quad (17)$$

with $i, j = 1, 2$. Also in this case, the augmented equations belong to the same class of the initial ones, and the system matrices have the same structure of (11).

C. Stochastic Model for the Cascaded Structure

According to the properties of the CPM, the overall matrix for the deterministic case is given by the product of the matrices of the individual blocks, i.e., $\mathbf{T} = \mathbf{T}_C \mathbf{T}_{\mathrm{TL}}$. This guarantees the continuity of voltages and currents across section b.

Accounting for a single source of variability at a time means to describe the relevant block with its stochastic (i.e., augmented) model. Nevertheless, a consistent representation is required to allow the connection between the stochastic and the deterministic part by assuring the continuity of voltage and current variables across section b. This can be accomplished by interpreting the deterministic characteristics as a zero-order expansion. For instance, the CPM for the deterministic transmission line of case (i) can be written as $\mathbf{T}_{\mathrm{TL}} = \mathbf{T}_{\mathrm{TL}} \phi_0(\xi)$. This allows to write the following expanded transmission equation for the distributed block

$$\begin{aligned} &\mathbf{X}_{b,0}\phi_0(\xi) + \mathbf{X}_{b,1}\phi_1(\xi) + \mathbf{X}_{b,2}\phi_2(\xi) = \\ &\mathbf{T}_{\mathrm{TL}}\phi_0(\xi)(\mathbf{X}_{a,0}\phi_0(\xi) + \mathbf{X}_{a,1}\phi_1(\xi) + \mathbf{X}_{a,2}\phi_2(\xi)), \end{aligned} \tag{18}$$

yielding the following augmented system

$$\tilde{\mathbf{X}}_b(s) = \hat{\mathbf{T}}_{\mathrm{TL}}(\mathcal{L}, s)\tilde{\mathbf{X}}_a(s), \tag{19}$$

where the blocks of $\hat{\mathbf{T}}_{\mathrm{TL}}$ turn out to be diagonal, i.e.,

$$\hat{\mathbf{T}}_{\mathrm{TL},ij} = \begin{bmatrix} \mathbf{T}_{\mathrm{TL},ij} & 0 & 0 \\ 0 & \mathbf{T}_{\mathrm{TL},ij} & 0 \\ 0 & 0 & \mathbf{T}_{\mathrm{TL},ij} \end{bmatrix} \tag{20}$$

with $i, j = 1, 2$. There is now a unique correspondence between the voltage and current variables $\tilde{\mathbf{X}}_b$ across section b in (19) and (16). Hence, it is possible to concatenate these two equations by substituting the former into the latter:

$$\tilde{\mathbf{X}}_c(s) = \tilde{\mathbf{T}}_C(s)\tilde{\mathbf{X}}_b(s) = \tilde{\mathbf{T}}_C(s)\hat{\mathbf{T}}_{\mathrm{TL}}(\mathcal{L}, s)\tilde{\mathbf{X}}_a(s). \tag{21}$$

Therefore, the overall augmented CPM for case (i) is $\tilde{\mathbf{T}} = \tilde{\mathbf{T}}_C \hat{\mathbf{T}}_{\mathrm{TL}}$. The derivation of the analogous formulation for case (ii) is straightforward and amounts to concatenating the stochastic model for the transmission line given by $\tilde{\mathbf{T}}_{\mathrm{TL}}$ with the augmented diagonal representation $\hat{\mathbf{T}}_C$ of the deterministic RLC network, obtained similarly to $\hat{\mathbf{T}}_{\mathrm{TL}}$. The formal development is omitted for the sake of brevity. As a result, $\tilde{\mathbf{T}} = \hat{\mathbf{T}}_C \tilde{\mathbf{T}}_{\mathrm{TL}}$.

In general, there is no restriction about considering all the blocks as simultaneously stochastic. Yet, the generation of each extended model must be carried out including all the random variables in the problem, in order to have a consistent representation of all blocks for the concatenation.

D. Incorporation of the Boundary Conditions

The simulation of a structure like the one of Fig. 1 amounts to combining the port electrical relations of the two terminal elements defining sources (transmitters) and loads (receivers) with the overall CPM, resulting from the cascaded connection of the transmission line and the lumped network and representing the generic solution of the structure. As already outlined, the overall CPM is given by the product $\mathbf{T} = \mathbf{T}_C \mathbf{T}_{\mathrm{TL}}$ for the deterministic case, while it is computed as $\tilde{\mathbf{T}} = \tilde{\mathbf{T}}_C \hat{\mathbf{T}}_{\mathrm{TL}}$ and $\tilde{\mathbf{T}} = \hat{\mathbf{T}}_C \tilde{\mathbf{T}}_{\mathrm{TL}}$ for the stochastic cases (i) and (ii), respectively. When dealing with augmented models, also the port relations must be written in an extended form, in order to allow their combination across sections a and c, similarly to what was done for the continuity across section b. This will represent the last step in the development of the presented methodology.

For the example of Fig. 1, the port equations at the terminations become

$$\begin{cases} \mathbf{V}_a(s) &= \mathbf{V}_S(s) - \mathbf{Z}_S(s)\mathbf{I}_a(s) \\ \mathbf{V}_c(s) &= \mathbf{Z}_L(s)\mathbf{I}_c(s), \end{cases} \tag{22}$$

with $\mathbf{V}_S(s) = [E_1(s), E_2(s)]^T$ and $\mathbf{Z}_{S,L} = \mathrm{diag}([Z_{S1,L1}, Z_{S2,L2}])$. Expansion of the first row of (22) leads to

$$\begin{aligned} &\mathbf{V}_{a,0}\phi_0(\xi) + \mathbf{V}_{a,1}\phi_1(\xi) + \mathbf{V}_{a,2}\phi_2(\xi) = \mathbf{V}_S\phi_0(\xi) + \\ &+\mathbf{Z}_S\phi_0(\xi)(\mathbf{I}_{a,0}\phi_0(\xi) + \mathbf{I}_{a,1}\phi_1(\xi) + \mathbf{I}_{a,2}\phi_2(\xi)). \end{aligned} \tag{23}$$

The projection of the previous equation and its companion arising from the second row of (22) on Legendre polynomials, yields the following augmented port equations

$$\begin{cases} \tilde{\mathbf{V}}_a(s) &= \hat{\mathbf{V}}_S(s) - \hat{\mathbf{Z}}_S(s)\tilde{\mathbf{I}}_a(s) \\ \tilde{\mathbf{V}}_c(s) &= \hat{\mathbf{Z}}_L(s)\tilde{\mathbf{I}}_c(s), \end{cases} \tag{24}$$

where $\hat{\mathbf{V}}_S(s) = [\mathbf{V}_S(s), 0 \ldots 0]^T$, while $\hat{\mathbf{Z}}_S(s)$ and $\hat{\mathbf{Z}}_L(s)$ are diagonal.

The solution of the system comes from the standard procedure for combining the boundary conditions with the equations given by the CPM at both ends (cfr Ch.s 4 and 5 of [8]). For the stochastic problem, the augmented CPM $\tilde{\mathbf{T}}$ is used in place of $\mathbf{T}$, together with (24). Therefore, the currents at the extremities can be computed as

$$\begin{cases} \tilde{\mathbf{I}}_a = \mathbf{A}^{-1}\mathbf{b} \\ \tilde{\mathbf{I}}_c = \tilde{\mathbf{T}}_{21}\hat{\mathbf{V}}_S + (\tilde{\mathbf{T}}_{22} - \tilde{\mathbf{T}}_{21}\hat{\mathbf{Z}}_S)\tilde{\mathbf{I}}_a, \end{cases} \tag{25}$$

where

$$\begin{cases} \mathbf{A} = \tilde{\mathbf{T}}_{11}\hat{\mathbf{Z}}_S + \hat{\mathbf{Z}}_L\tilde{\mathbf{T}}_{22} - \tilde{\mathbf{T}}_{12} - \hat{\mathbf{Z}}_L\tilde{\mathbf{T}}_{21}\hat{\mathbf{Z}}_S \\ \mathbf{b} = (\tilde{\mathbf{T}}_{11} - \hat{\mathbf{Z}}_L\tilde{\mathbf{T}}_{21})\hat{\mathbf{V}}_S, \end{cases} \tag{26}$$

whereas the voltages are obtained from (24).

E. Simulation

Once the unknown voltages and currents are computed, the quantitative information on the spreading of circuit responses can be readily obtained from the analytical expression of the unknowns. As an example, the frequency-domain solution of the magnitude of voltage V_{c2}, arising form (24) and (25) with $P = 2$, leads to $|V_{c2}(j\omega)| = |V_{c2,0}(j\omega) + V_{c2,1}(j\omega)\xi + V_{c2,2}(j\omega)(\frac{3}{2}\xi^2 - \frac{1}{2})|$, where the first numerical index denotes the conductor and the second one denotes the expansion term. The above relation can be used to compute the PDF of $|V_{c2}(j\omega)|$, using the rules of random variable transformations given in [7].

IV. Numerical Results

In this section, the proposed technique is applied to the analysis of a coupled microstrip connected to two inverters inside a realistic component, namely the Texas Instruments "AHC04D", that is a 14-pin Hex Inverter SOIC, whose IBIS model [10] is available from the vendor website. Referring to Fig. 1, the nominal parameters for the line are $w = 100\,\mu$m, $d = 80\,\mu$m, $h = 60\,\mu$m, $t = 35\,\mu$m, $\varepsilon_r = 3.7$ and $\mathcal{L} = 5$ cm; the typical pin parasitics values of the IC ($R_p = 31$ mΩ, $L_p = 3.109$ nH and $C_p = 0.473$ pF) are provided by the IBIS model, which is used also to estimate the input impedance of the IC buffer. The line is excited by ideal drivers (one active and one off), whose equivalent series impedance are $Z_{S1} = Z_{S2} = 50\,\Omega$ and $Z_{L1} = Z_{L2} = 1/(sC_L + G_L)$, being $C_L = 10$ pF, $G_L = 1/(10\,\text{k}\Omega)$.

In case (i), the randomness is provided by the values of the pin parasitics, that – according to the IBIS model – vary in the following ranges: $R_p \in [28, 34]$ mΩ, $L_p \in [2.462, 3.889]$ nH and $C_p \in [0.363, 0.628]$ pF; in case (ii), the pin parasitics are assumed to have their typical values, while the transmission-line trace separation, substrate height and permittivity are supposed to be stochastic, uniformly distributed between -10% and $+10\%$ of their nominal values, i.e., $d \in [72, 88]\,\mu$m, $h \in [54, 66]\,\mu$m and $\varepsilon_r \in [3.33, 4.07]$. The approximate relations given in [9] were used to numerically compute the PC expansion of the p.u.l. parameters of the coupled microstrip, whereas the expansion of the CPM for the lumped block is analytically obtained from (14).

Figures 2 and 3 show the transfer function between the voltage source and the package input on the quiet line, with either random pin parasitics or line parameters, respectively. In both figures, the black thick line represents the response of the structure for the nominal values of its parameters, while the thinner black lines indicate the limits of the 3σ bound (σ being the standard deviation) determined from the results of the proposed technique. Finally, a qualitative set of 100 MC simulations is plotted using gray lines. Clearly, the parameter variations lead to a spread in the transfer functions, that is well predicted by the estimated 3σ limit in both cases.

A better quantitative prediction becomes possible from the knowledge of the actual PDF of the network response, as allowed by the advocated technique. To this end, Figure 4 superimposes the PDFs of $|V_{c2}(j\omega)/E_1(j\omega)|$ computed at three different frequencies for cases (i) and (ii). Furthermore, the figure compares the distributions obtained from the analytical PC expansion with those computed over 20,000 MC simulations. The frequencies selected for this comparison correspond to the dashed lines shown in Fig. 2 and 3.

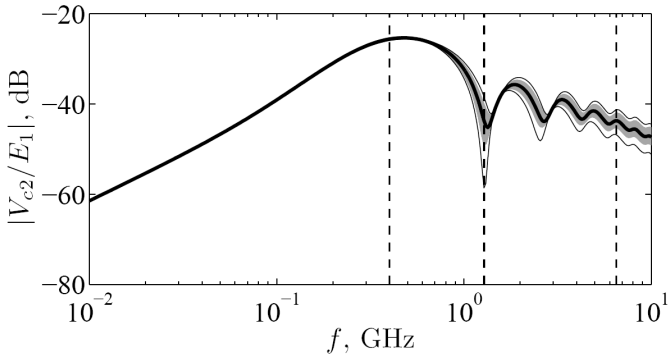

Fig. 2. Magnitude of $|V_{c2}(j\omega)/E_1(j\omega)|$ for case (i), i.e. random pin parasitics and deterministic interconnect. Solid black thick line: deterministic response; solid black thin line: 3σ limits of the second-order PC expansion; gray lines: a sample of responses obtained by means of the MC method (limited to 100 curves, for graph readability).

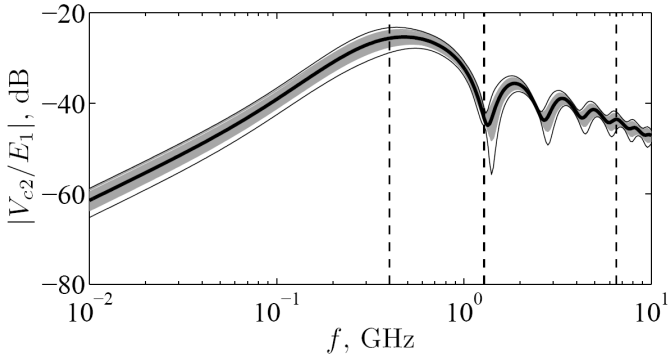

Fig. 3. Magnitude of $|V_{c2}(j\omega)/E_1(j\omega)|$ for case (ii), i.e. random transmission-line parameters and deterministic IC package values. Solid black thick line: deterministic response; solid black thin line: 3σ limits of the third-order PC expansion; gray lines: a sample of responses obtained by means of the MC method (limited to 100 curves, for graph readability).

The analysis of Figs. 2 to 4 reveals that the statistical behavior of the structure, e.g., the amount of the spread or the shape of its distribution, is strongly related to the frequency and to the source of variability. For instance, the low-frequency response of the structure is much more spread in case (ii) than in case (i). Moreover the good agreement between the actual and the predicted PDFs and, in particular, the accuracy in reproducing the tails and the large variability of non-uniform shapes of the reference distributions, confirm the potential of the proposed method. For this example, it is also clear that a PC expansion with $P = 3$ is already accurate enough to capture the dominant statistical information of the system response.

Finally, Fig. 5 shows that values of the PC expansion coefficients may provide some interesting insights on the influence of each random variable on the overall response.

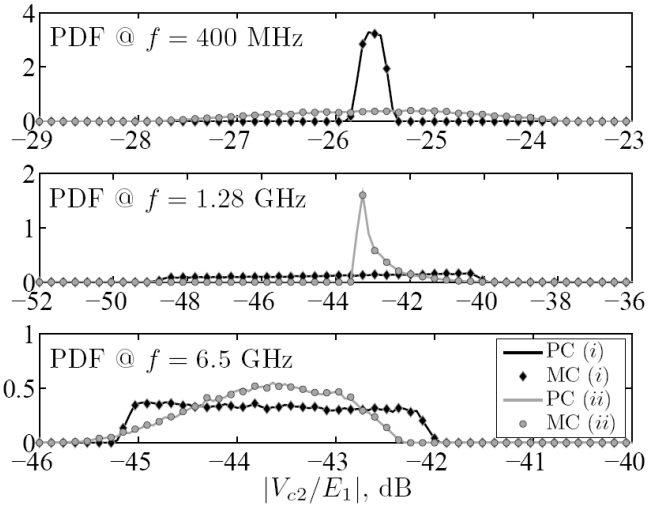

Fig. 4. Probability density function of $|V_{c2}(j\omega)/E_1(j\omega)|$ computed at different frequencies. Black curves refer to case (i), while gray curves refer to case (ii). The distributions marked MC refer to 20,000 MC simulations, whereas those marked PC refer to the response obtained via a second-order and a third-order PC expansion for cases (i) and (ii), respectively.

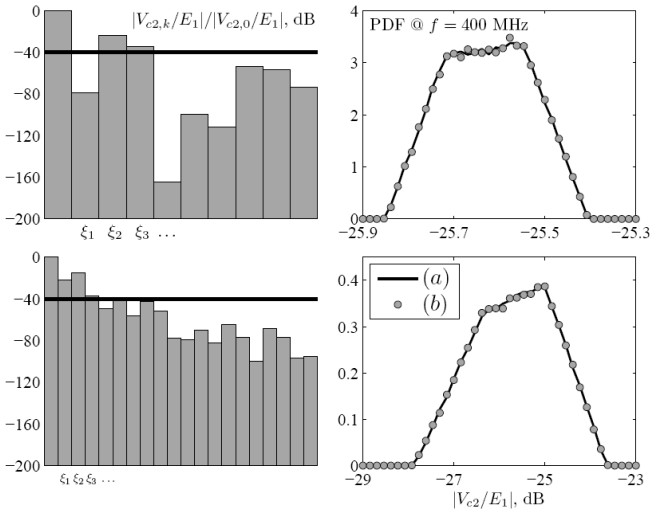

Fig. 5. Test of parameters influence on $|V_{c2}(j\omega)/E_1(j\omega)|$ at 400 MHz for cases (i) (top panels) and (ii) (bottom panels). Left panels: histogram comparing the magnitude of PC coefficients; solid black line: -40 dB level; the labels along the horizontal axis indicate the first main factors. Right panels: comparison between the probability density functions in Fig. 4 (a) and those computed by neglecting the variability on the parameter whose coefficients are close to or below the -40 dB level (b).

The basic idea is to consider the polynomial series as a combination of main factors (i.e., terms depending on a sole variable) and interaction factors (i.e., terms containing mixed variables). According to this interpretation, the coefficients of main factors that turn out to have a smaller magnitude are expected to play a negligible role on the estimated quantity.

At the aim of veryfing this assumption, Fig. 5 (left panels) shows the magnitude of the coefficients of $|V_{c2}(j\omega)/E_1(j\omega)|$ at 400 MHz, both for case (i) and (ii), normalized with respect to the zeroth order term. The second, third and fourth bars are the coefficients of the first three main factors ξ_1, ξ_2 and ξ_3, i.e., the random variables parameterizing the varability of R_p, L_p and C_p, respectively, in case (i) and d, h and ε_r, respectively, in case (ii). The solid black lines indicate the -40 dB level, i.e., 1% below the zeroth order term. The right panels compare the PDFs previously computed and those obtained by ignoring the variability on the parameter associated with the lowest values in the histogram, i.e., the resistance R_p for case (i) and the permittivty ε_r for case (ii). The good agreement between the PDFs confirms the potential of this analysis in the identification of the most influential parameters.

V. Conclusions

The generation of a stochastic model describing a realistic interconnected structure with the inclusion of external uncertainties, like random geometric parameters or load conditions, is addressed in this paper. The proposed method is based on the expansion of the system variables into a sum of a limited number of orthogonal basis functions, leading to an extended set of multiport equations. The advocated method, while providing accurate results, turns out to be more efficient than the classical Monte Carlo technique in determining the system response sensitivity to parameters variability.

The computational advantages of PC arise from the limited number of samples of the structure parameters required and the reduced size of the system that must be solved. The speed-up observed in the proposed example is around $100\times$. Even better speed-ups are to be expected in case of more complex structures, where the longer time required by MC simulations makes the overhead introduced by PC negligible.

Furthermore, the approximation given by the PC expansion provides in fact an explicit analytical expression of the system variables in terms of the random parameters, that helps to highlight their influence.

References

[1] L. R. A. X. Menezes, A. O. Paredes, H. Abdalla, G. A. Borges, "Modeling Device Manufacturing Uncertainty in Electromagnetic Simulations," Digest of the *2008 IEEE MTT-S International Microwave Symposium,* pp. 1385–1388, Jun 15-20, 2008.

[2] R. G. Ghanen, P. D. Spanos, "Stochastic Finite Elements. A Spectral Approach," Springer-Verlag, 1991 (Ch. 2).

[3] D. Xiu, G. E. Karniadakis, "The Wiener-Askey Polynomial Chaos for Stochastic Differential Equations," SIAM, Journal of Sci. Computation, Vol. 24, No. 2, pp. 619–622, 2002.

[4] N. Wiener, "The Homogeneous Chaos," Amer. J. Math., 60 (1938), pp. 897–936.

[5] K. Strunz, Q. Su, "Stochastic Formulation of SPICE-Type Electronic Circuit Simulation with Polynomial Chaos," ACM Transactions on Modeling and Computer Simulation, Vol. 18, No. 4, Sep. 2008.

[6] P. Manfredi, I. S. Stievano, F. G. Canavero, "Parameters Variability Effects on Microstrip Interconnects via Hermite Polynomial Chaos," Proc. of the *19th Conference on Electrical Performance of Electronic Packaging and Systems,* pp. 149–152, Oct 24-27, 2010.

[7] A. Papoulis, "Probability, Random Variables and Stochastic Processes," 3rd edition, McGraw-Hill, 1991.

[8] C. R. Paul, "Analysis of Multiconductor Transmission Lines," Wiley, 1994.

[9] B. C. Wadell "Transmission Line Design Handbook," Artech House, 1991.

[10] I/O Buffer Information Specification (IBIS) Ver. 5.0, on the web at http://www.eigroup.org/ibis/ibis.htm, Aug. 2008.