POLITECNICO DI TORINO
Repository ISTITUZIONALE

ULTRA WIDE BAND TRANSMITTER FOR BREAST CANCER DETECTION

Original
ULTRA WIDE BAND TRANSMITTER FOR BREAST CANCER DETECTION / Casu, MARIO ROBERTO; Crepaldi, Marco; Cutrupi, M.; Graziano, Mariagrazia; Zamboni, Maurizio. - STAMPA. - (2010), pp. 453-454. (Intervento presentato al convegno Congresso Nazionale di Bioingegneria 2010 tenutosi a Torino (IT) nel 8-10 Luglio).

Availability:
This version is available at: 11583/2375483 since:

Publisher:
Patron Editore

Published
DOI:

Terms of use:

This article is made available under terms and conditions as specified in the corresponding bibliographic description in the repository

Publisher copyright

(Article begins on next page)

12 October 2024

ULTRA WIDE BAND TRANSMITTER FOR BREAST CANCER DETECTION

M.R.Casu , M.Crepaldi , M.Cutrupi, M.Graziano, M.Zamboni
VLSI Lab, Dipartimento di Elettronica, Politecnico di Torino, Torino, Italy

INTRODUCTION

Impulse-based Ultra-Wide-Band (UWB) technologies gained interest in the last decade not only in the wireless communications field, but also in biomedicine as they are effective for the detection of anomalies in biological tissues with abrupt variations of electric permittivity. Hence, UWB has been proposed as an alternative non-invasive imaging technique for pre-screening breast cancer in young individuals [1]. Information of presence or absence of a cancer is contained in the scattered radiation from a body interface taken from a single or multiple moving antennas. After a first pulse acquisition from different relative positions, UWB waveforms are stored and post-processed by means of specific algorithms which reveal the presence and the position of tumor along a bi-dimensional surface. Proof-of-concept systems proposed in the literature for the measurement of the reflexion coefficients consist of high performance RF networks analyzers and an antenna moved in different positions around the breast. However, UWB imaging systems promise lower hospitalization costs and shorter waiting lines in diagnosis centers with respect to standard mammography techniques only if ad-hoc and low-cost integrated solutions become available so as to enable a capillary diffusion. The most recent and relevant scanning algorithms used to process scattered UWB [2][3][4] relies on precise UWB waveforms with given spectrum and specific characteristics. Typical pulses are Modulated and Modified Hermite Polynomials (MMHP) the degree of which defines center frequency and duration of the pulse. Low duration pulses with high center frequencies guarantee better focusing performance, while opposite features increase Signal-to-Clutter Contrast (SCC). Hence, a pulse-based flexible TX capable of generating different UWB pulses should allow the diagnosis even in individuals with drastically different characteristics. Flexible, integrated UWB transmitters for breast cancer imaging have not been proposed so far. Here we present a low-cost, fully integrated and flexible CMOS UWB transmitter architecture capable of generating a large set of UWB pulses. The circuit has been designed on a Complementary Metal Oxide Semiconductor (CMOS) 130nm technology and simulated with Cadence design framework.

ARCHITECTURE

Generating a big variety of pulses requires high flexibility at architectural level. We rely on the Distributed Waveform Generator (DWG) technique [6] adapted to our need. In DWG systems the pulse is synthesized by weighting and adding delayed base pulses Vb as shown in figure 1. The scheme in figure 2 represents the architecture of the transmitter. The phases generated by a Delay Locked Loop (DLL) from a single very low jitter clock reference, each distant from each other of a fixed tiny delay, feed 24 pulse generators. These are made of XOR gates designed in Current Mode Logic (CML). Multiplier blocks are Programmable Gain Amplifiers (PGA) which scale the pulse amplitudes by a digital quantity fed by a Finite State Machine (FSM). The outputs of the PGA are added together and successively power-amplified to drive the antenna load. The multipliers, that is the PGAs, have been grouped in 3 elements each and connected to the same load to generate a partial sum of the result. Each of the 8 multiplier banks is connected to an element of the sum network that adds the generated voltages according to a binary tree structure. One of the most important units of the combination network is the Programmable Gain Amplifier whose schematic is in figure 3. Multiplication is provided by transistors M3-6 that modulate the current flowing through the two output nets: the differential current I2-I1 is linearly proportional to the differential input Vin+-Vin- and to the trasconductance of the bottom transistors. The latter, and thus the gain, is controlled by digital 8-bit words GAIN[7-0] that activate transistors M7-10 thus setting a stage bias current according to the digital control word. Here, the gate of 8 groups of transistors in parallel, scaled each of a factor 2, is controlled by a single digital activation bit.

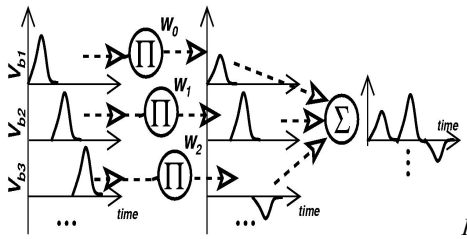

Fig 1.
Conceptual pulse synthesis

RESULTS

The pulse generated by our transmitter has been compared to ideal pulses normally used in other works' theoretical analyses and generated with Matlab. The most important part of the pulse synthesis is the tap calculation (not reported for brevity, but see [7] for details). The resulting pulse is shown in figure 4 where a comparison between ideal pulses obtained through Matlab and Cadence is presented. To show the flexibility of the system, the circuit has been tested with different signals like the Gaussian pulse of [3] and three different MMHP's [6]. The integral mean square error in the 4 cases is 1.2%, 1.3%, 1.8% and 2%, respectively. With pre-emphasis it is possible to account for the antenna and to demonstrate it a lumped circuit model of a 3cm circular dipole UWB antenna (3-10GHz range) in transmission mode has been considered. Figure 5 shows the radiated pulse with pre-emphasis and the antenna model included in simulation. The signal used is the same of figure 6.a. In case the antenna is not accounted for in taps calculation (subfigure b) the pulse does not match the target signal.

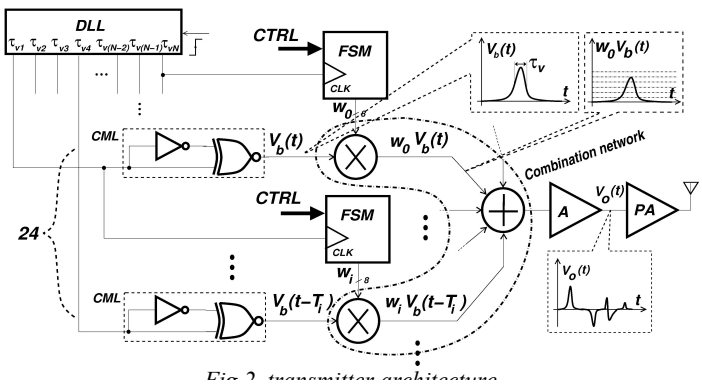

Fig 2. transmitter architecture

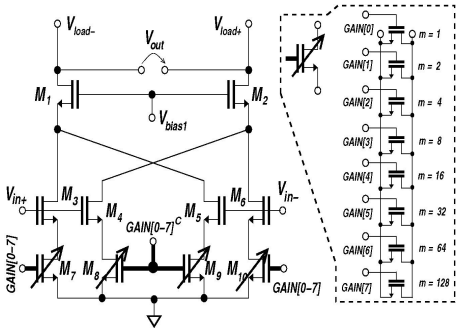

Fig 3. Programmable Gain Amplifier

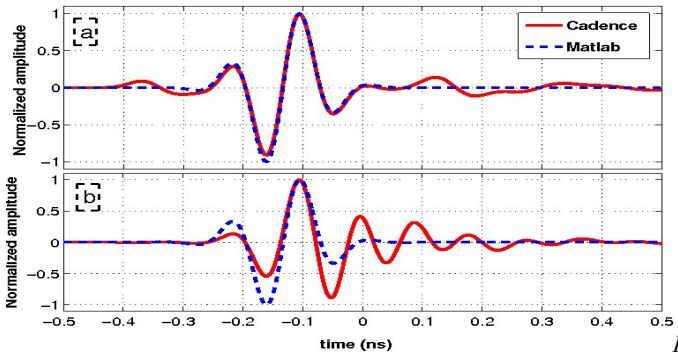

Fig.5 Simulation with antenna with (a) and without (b) compensation

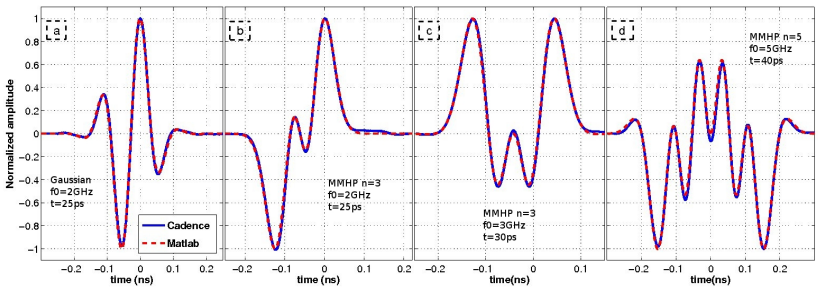

Fig 4. Comparison between Matlab and transistor level Cadence simulations with compensation: Gaussian (a), MMHP (b,c,d)

REFERENCES

[1] S.C.Hagness et al. "Three-dimensional fdtd analysis of a pulsed microwave confocal system for breast cancer detection: Design of an antenna-array element", IEEE T. Antennas and Propagation, vol.47, no.5, May 1999.

[2] X.Li et al., "A confocal microwave imaging algorithm for breast cancer detection," IEEE Microwave and Wireless Components Letters, vol.11, no.3, Mar. 2001.

[3] X.Li et al., "Microwave imaging via space-time beamforming: Experimental investigation of tumor detection in multilayer breast phantoms," IEEE T. on Microwave Theory and Techniques, vol. 52, no.8, Aug. 2004.

[4] P.Kosmas et al., "Time reversal with the fdtd method for microwave breast cancer detection," IEEE T. on Microwave Theory and Techniques,, vol.53, no.7, July 2005.

[5] Y.Zhu et al. "Distributed waveform generator: A new circuit technique for ultra-wideband pulse generation, shaping and modulation", IEEE J. Solid-State Circuits, vol.44, no.3, Mar. 2009.

[6] Y.Chen et al., "Pulse design for time reversal method as applied to ultrawideband microwave breast cancer detection: A two-dimensional analysis," IEEE T. on Antennas and Propagation, vol.55, no.1, Jan. 2007.

[7] M.Cutrupi et al. "A Flexible UWB Transmitter for Breast Cancer Detection Imaging Systems", Proc. of IEEE DATE'10, Dresden, Germany, March 9-11 2010.