POLITECNICO DI TORINO
Repository ISTITUZIONALE

Improved Fibre Bragg Grating Interrogation for Dynamic Strain Measurement

Original
Improved Fibre Bragg Grating Interrogation for Dynamic Strain Measurement / Tosi, D; Olivero, Massimo; Perrone, Guido; Vallan, Alberto. - In: DGAO PROCEEDINGS. - ISSN 1614-8436. - STAMPA. - (2009). (Intervento presentato al convegno Joint Meeting DGaO/SIOF tenutosi a Brescia nel June 5, 2009).

Availability:
This version is available at: 11583/2283612 since:

Publisher:

Published
DOI:

Terms of use:

This article is made available under terms and conditions as specified in the corresponding bibliographic description in the repository

Publisher copyright

(Article begins on next page)

12 October 2024

Improved Fibre Bragg Grating Interrogation for Dynamic Strain Measurement

Daniele Tosi, Massimo Olivero, Guido Perrone, Alberto Vallan

Department of Electronics, Politecnico di Torino

mailto:daniele.tosi@polito.it

A cost-effective fiber Bragg grating sensor capable of measuring small vibrations also at high frequencies, with an accuracy of few nanostrains, is presented. Low cost and high sensitivity are obtained using an interrogation scheme based on intensity modulation and signal processing to reduce of the impact of noise.

1 Introduction

Fiber Bragg gratings (FBGs) are the most popular technology for the measurement of deformations, strains and vibrations using photonics [1]. For instance, FBGs are typically employed in monitoring large civil infrastructures or historical buildings, but applications can be found also in biomedical devices and acoustics. In spite of this, the expensiveness intrinsic in many FBG interrogation techniques severely limits the range of potential application of such optical sensors. For this reason, among the several alternatives resumed in Fig. 1, we focused on low-cost approaches, based on intensity modulation and simple power detection, to open up to a broader range of applications in the field of structural engineering.

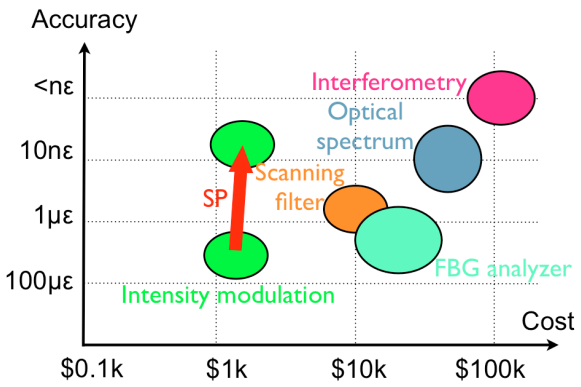

Fig. 1 *The market of fiber Bragg grating sensor: accuracy vs cost for the main sensing techniques, and the effect of signal processing.*

However, intensity based methods usually have a poor resolution, but this limitation can be overcome using suitable signal processing (SP) techniques, which allow a dramatic increase of performances, improving the sensitivity of about two orders of magnitude, with just minimum additional costs due to processing units [2,3]. The combination of the two techniques pushes this kind of sensor up to the same performance level of more expensive alternative configuration, making it a really competitive solution.

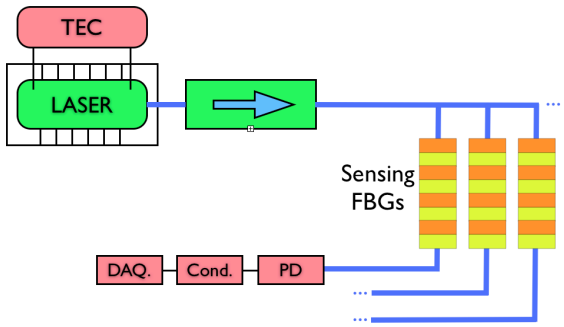

Fig. 2 *Layout of the FBG interrogation system.*

2 The optical system

The optical system has an extremely simple configuration, as sketched in Fig. 2. It uses a fixed-wavelength laser driven by a thermo-electric controller; then the laser is connected to the FBG transducers through a highly isolating stage. When the FBG is strained, the output power changes as a result of the induced wavelength shift. The receiver is made by a photodiode, a conditioning circuit and a data acquisition card. Multiple FBG interrogation is possible by splitting the laser

source into multiple channels, all connecting to wavelength-matched FBGs and terminating into a receiving circuit.

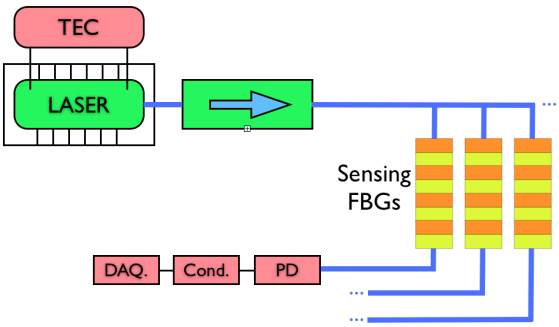

Fig. 3 *Layout of the FBG interrogation system.*

3 Signal processing

With the "pure" optical system, performances are limited by internal noise, due to the backreflection from FBGs into the laser cavity. Using adaptive filters, it is possible to reduce the internal noise without having prior knowledge of its spectral properties. By using a RLS filter trained in static conditions, we can improve the signal-to-noise ratio (SNR) by 14 dB.

We can have an additional gain by using an efficient spectral estimator. Using the Capon estimator as in [5], we obtained correct detection with SNR as low as -25 dB, corresponding to a net gain of 15 dB with respect to standard estimators such as FFT.

The result is that SP produces an outstanding increase of 29 dB in terms of SNR; with this value, the minimum oscillation amplitude that can be correctly processed in the frequency domain is 5.6 nε.

4 Experimental results

The proposed sensor has been used to measure vibrations in some simple structures as well as for the detection of acoustic waves, in order to validate performances for a broad spectrum of applications. Fig. 3 reports some results, obtained comparing the FBG sensor with a MEMS for the measurement of resonance frequency of a sample structure, and registering voice from a recorded speech.

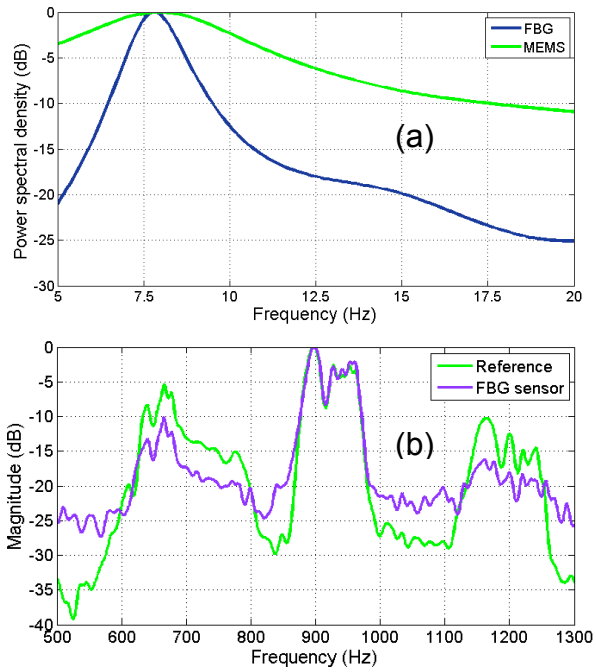

Fig. 4 *Experimental results: (a) measurement of the resonance frequency of an aluminum bar, comparing the FBG sensor with a MEMS; (b) spectral measurement of recorded speech.*

5 Conclusions

Performances of the sensing system, and the effect of SP, are resumed in Table 1.

Performances	Optical	Optical + SP
Minimum SNR	-10 dB	-39 dB
Accuracy	800 nε	5.6 nε
Working range	60 με	60 με
Resolution	<< 1 nε	<< 1 nε

Tab. 1 *Performances of the optical system, with and without the application of signal processing.*

References

[1] Y. J. Rao: „In-fibre Bragg grating sensors" in *Meas. Sci. Technol.*, **8**: 355-75 (1997).

[2] D. Tosi, M. Olivero, G. Perrone, „Low-cost fiber Bragg grating vibroacoustic sensor for voice and heartbeat detection" in *Appl. Opt.*,**47**: 5123-29 (2008).

[3] D. Tosi, M. Olivero, G. Perrone, „Dynamic strain measurement system with fiber Bragg gratings and noise mitigation techniques" in *Meas. Sci. Technol.*, **20**: (2009).

[4] S. Haykin: *Adaptive Filters Theory* – 4th edition, Prentice Hall, 2001).

[5] T. Ekman, A. Jakobsson, P. Stoica, „On efficient implementation of the Capon algorithm" in *Proc. European Sign. Proc. Conference* (2000).