POLITECNICO DI TORINO
Repository ISTITUZIONALE

Large-signal device simulation in time- and frequency-domain: a comparison

Original
Large-signal device simulation in time- and frequency-domain: a comparison / Bertazzi, Francesco; Bonani, Fabrizio; DONATI GUERRIERI, Simona; Ghione, Giovanni. - In: COMPEL. - ISSN 0332-1649. - Vol. 27 No. 6:(2008), pp. 1319-1325. [10.1108/03321640810905792]

Availability:
This version is available at: 11583/1855410 since:

Publisher:
Emerald

Published
DOI:10.1108/03321640810905792

Terms of use:

This article is made available under terms and conditions as specified in the corresponding bibliographic description in the repository

Publisher copyright

(Article begins on next page)

12 October 2024

Large-signal device simulation in time- and frequency-domain: a comparison

Francesco Bertazzi, Fabrizio Bonani, Simona Donati Guerrieri and Giovanni Ghione

Dipartimento di Elettronica, Politecnico di Torino, Turin, Italy

Abstract

Purpose – The aim of this paper is to compare the most common time- and frequency-domain numerical techniques for the determination of the steady-state solution in the physics-based simulation of a semiconductor device driven by a time-periodic generator.

Design/methodology/approach – The shooting and harmonic balance (HB) techniques are applied to the solution of the discretized drift-diffusion device model coupled to the external circuit embedding the semiconductor device, thus providing a fully nonlinear mixed mode simulation.

Findings – The comparison highlights the strong and weak points of the two approaches, basically showing that the time-domain solution is more robust with respect to the initial condition, while the HB solution provides a more rapid convergence once the initial datum is close enough to the solution itself.

Originality/value – The contribution compares two numerical techniques for the determination of the steady-state solution of nonlinear dynamical systems, popular in the area of RF circuit analysis but rarely applied to device simulation. In particular, this is the first application of the shooting method to forced devices.

Keywords Semiconductors, Modelling, Microwave transistors

Paper type Research paper

1. Introduction

The development of high performance integrated circuits for RF and microwave systems in both conventional and innovative technologies and the optimization of their analog figures of merit (such as the noise figure in the receiver stage and the linearity and intermodulation distortion in the transmitter stage) requires, as a preliminary step, the physics-based simulation of semiconductor devices operated in linear (as in low-noise amplifiers), and nonlinear (as in power amplifiers, mixers, oscillators and frequency multipliers) conditions (Maas, 2005; Gonzalez, 1984). Nonlinear analog operation in narrowband systems is usually denoted as (quasi)-periodic large-signal (LS), meaning that the device working point varies with time according to a strictly periodic or quasi-periodic law.

Within this framework, physics-based modeling in nonlinear operation plays a fundamental role not only in technology device CAD and optimization, but also in the development of meaningful and physically sound compact models (Bonani *et al.*, 2003), mandatory for the design and optimization of complex circuits. Irrespective of the specific model aim (i.e. power saturation estimate, distortion prediction,

This work was supported by the Italian Ministry of University and Research through the PRIN 2006 project "Non-linear models and design approaches for low-noise high dynamic range integrated radio systems".

cyclostationary noise analysis, etc.), the first and basic step to be carried out is the computation of the steady-state solution, which, in nonlinear operation, has to include the device model(s) together with the embedding circuit. This is a critical and time-consuming step, in particular for very large circuits and for a discretized physics-based model in 2D or 3D, owing to the very large number of equations involved. Even more difficult is the determination of the working point for oscillators (autonomous case), where the oscillation period is unknown: specific algorithms have been developed for this case, like the homotopy methods (Duan and Mayaram, 2006).

The numerical techniques for the determination of the LS working point can be classified into two main categories: time- and frequency-domain techniques (see Kundert, 1999 for a recent review). In the first case, besides standard time-integration which is particularly inefficient whenever time-periodic solutions are sought for, specialized techniques have been devised; among them, the most widely exploited probably is the shooting method (Aprille and Trick, 1972; Kundert *et al.*, 1990). Frequency-domain solutions are usually based on the harmonic balance (HB) technique, wherein the problem unknowns are the (in general, complex) amplitudes of the Fourier series representing the time-periodic functions (Kundert *et al.*, 1990). Notice that the presence of distributed elements in the embedding circuit (e.g. transmission lines) favours HB with respect to time-domain solutions, since such components are much more efficiently described in the frequency domain (Kundert *et al.*, 1990).

In this paper, we focus on a comparison between the HB and shooting methods for the LS (quasi)-periodic solution under forced (non-autonomous) operation of a partial differential equation (PDE) based physical model. We exploit as the transport model the well-known drift-diffusion approach, but extension to higher-order models derived from the Boltzmann transport equation is straightforward. In the area of physics-based device modeling, LS steady-state analog simulation is comparatively recent, since a few simulators only, either academic or commercial, include it as a standard option. Concerning the solution technique, this generally is the HB approach, originally exploited in Troyanovsky *et al.* (2000) and then used also in Bonani *et al.* (2001) as a basis for the physics-based cyclostationary noise analysis in LS operation. To our best knowledge, the shooting method has been implemented for physics-based modeling in Hong *et al.* (2006) only, with reference to the study of phase noise in oscillators.

2. The physical model

The semiconductor device is described by a physical model linking free carrier dynamics to the terminal applied voltages (or currents). As already recalled, we use the drift-diffusion approximation (Bonani *et al.*, 2003), which, for the bipolar case (including N_t trap levels to model low-frequency dispersion effects and noise), reads:

$$\nabla^2\phi = -\frac{q}{\varepsilon}\left(p - n - \sum_{k=1}^{N_t} n_{t,k}\right) \tag{1}$$

$$\frac{\partial n}{\partial t} = -\nabla\cdot(n\mu_n\nabla\phi - D_n\nabla n) - U_n \tag{2}$$

$$\frac{\partial p}{\partial t} = \nabla\cdot(p\mu_p\nabla\phi + D_p\nabla p) - U_p \tag{3}$$

$$\frac{\partial n_{t,k}}{\partial t} = -U_k \quad k = 1, \ldots, N_t \tag{4}$$

where ϕ is the electrostatic potential, n and p are the free carrier densities (electrons and holes, respectively), $n_{t,k}$ is the concentration of electrons filling k-th trap-level, q is the (positive) electron charge, ∇^2 is the material dielectric permittivity, ϵ is the carrier mobility and D the carrier diffusivity. $U = R - G$ is the net recombination rate of the energy level considered, R and G are the recombination and generation rates, respectively.

For LS device simulation, the physical model equations must be solved self-consistently with the equations of the embedding circuit, thus requiring a fully mixed-mode simulation (Bonani *et al.*, 2001). After discretization, the spatially discretized PDE system and the circuit equations can be cast in the form of a differential algebraic equation system (Bonani *et al.*, 2007):

$$\frac{\mathrm{d}\mathbf{q}(\mathbf{x})}{\mathrm{d}t} + \mathbf{f}(\mathbf{x}, t) = 0 \tag{5}$$

where $\mathbf{q}$ and $\mathbf{f}$ are nonlinear functions of their arguments, $\mathbf{x}(t)$ is the set of unknowns, and the explicit time dependence in $\mathbf{f}$ indicates the external, time-periodic generators present in the circuit. The size of the system is at least $N_{eq} = (3 + N_t)N_{mesh} + 2N_c$, where N_{mesh} is the number of mesh points for the spatial discretization of the physical model, and N_c is the number of device external contacts. Of course, if the embedding circuit is complex the number of circuit equations may grow with respect to the minimum (i.e. $2N_c$), but in most cases they are negligible with respect to $(3 + N_t)N_{mesh}$, in particular for a 2D or 3D simulation.

A general formulation for the numerical solution of equation (5), both with HB and with the shooting method can be found in Bonani *et al.* (2007). For the case of HB, if N_H harmonics are included in the simulation (excluding DC), the system size becomes $(2N_H + 1)N_{eq}$ (real equations). On the other hand, for the shooting method a discretization of the fundamental period $[0; T]$ into N_{time} time intervals results into $2(N_{time} + 1)$ successive solutions of a system of size N_{eq} (Bonani *et al.*, 2007). Of course, N_H and N_{time} are not independent, since the sampling theorem requires that to accurately represent a signal having N_H harmonics, the time samples should be at least $2N_H + 1$.

3. Case studies

To compare the time- and frequency-domain approaches, we have considered two case studies, referring to two typical RF or microwave circuits. The first is an almost ideal downconversion mixer, whose scheme is shown in Figure 1. To keep the embedding circuit simple, no input matching network was considered, while at the output a simple LC filter is included. The local oscillator (LO) frequency is 1 GHz, while the input RF is a tone at 1 GHz plus 1 MHz. The active device is a standard, epitaxial GaAs MESFET with 0.1 μm gate length and 100 μm gate perifery, simulated with a monopolar model (including electron velocity saturation effects) and no traps ($N_t = 0$), and discretized with a mesh of $N_{mesh} = 1{,}300$ points. A comparison of the time dependence of the device drain current in the working point set by a LO input tone of 0.4 V (no RF input, VDD = 5V and VGS = -0.3 V) is shown in Figure 2, comparing the HB and shooting solutions.

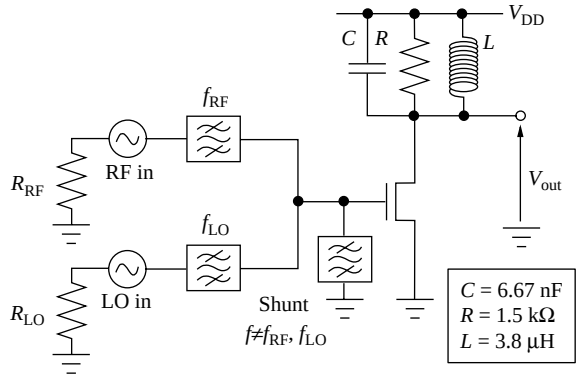

Figure 1.
Circuit of the MESFET mixer case study

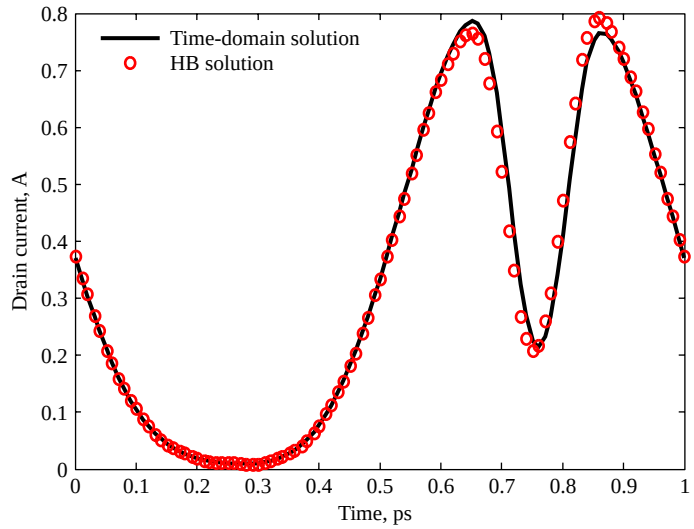

Figure 2.
Time-dependence of the drain current for the mixer circuit

Note: Comparison between the time-domain and the harmonic balance solutions

In the first case, $N_H = 10$, while in time domain $N_{time} = 50$. Of course, the two solutions are in very good agreement, but the simulation time is 25 per cent lower for the shooting method.

The second example is the class A power amplifier shown in Figure 3, based on a 0.5 μm epitaxial GaAs MESFET with 100 μm gate periphery. In this case, input and output matching networks at 18 GHz were included in the mixed mode simulation, to optimize the circuit efficiency. The device is again described by a monopolar model without traps, and $N_{mesh} = 900$. The bias point is set by $V_{DD} = 7$ V and $V_{GG} = -1.1$ V, while the input tone is 6 V. In frequency domain $N_H = 10$, while in time domain $N_{time} = 80$: the resulting drain current in the period is shown in Figure 4, and the simulation time is practically the same in the two cases.

In both examples, to attain a good accuracy in the comparison with HB N_{time} had to be chosen significantly larger than $2N_H + 1$, thus suggesting that frequency-domain

approaches are, at least in these cases, more accurate than the standard shooting method here implemented. For weakly nonlinear cases, such as the example of the class A power amplifier, the HB approach is efficient enough, and the simulation times are comparable to the time-domain approach. This is consistent with the behaviour observed in circuit simulations, where the trade-off between the two methodologies can be assessed as follows: the shooting method is in general less demanding in terms of the sensitivity of the convergence to the initial condition with respect to HB, meaning that even a poorer initial datum is sufficient to attain a reasonable approximation of the actual solution. On the other hand, the HB method is more precise in the sense that an accurate description of the solution itself requires a comparatively reduced number of harmonics. This seems to suggest that a credible strategy might be to use the time-domain approach to get a loose approximation of the solution, to be then fed to the HB as the initial condition to ultimately attain the required accuracy.

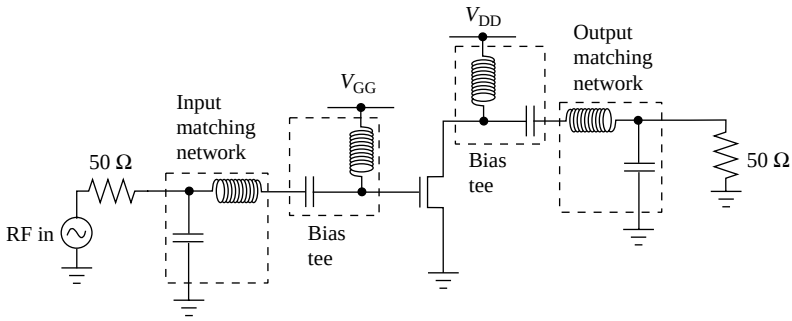

Figure 3.
Circuit of the MESFET power amplifier case study

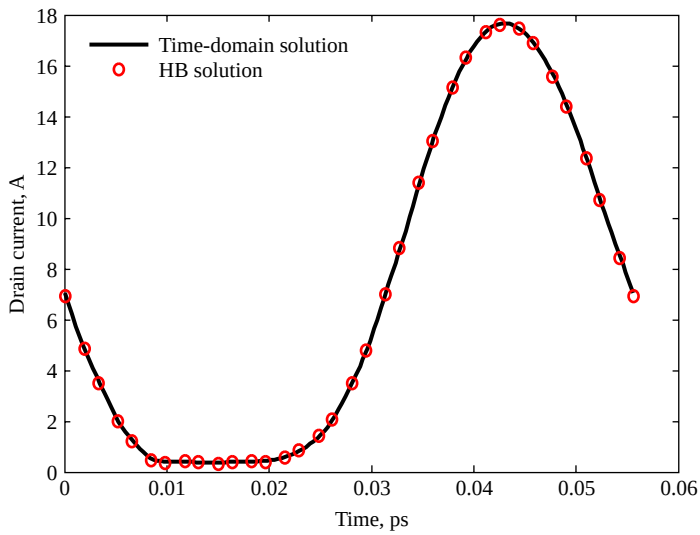

Note: Comparison between the time-domain and the harmonic balance solutions

Figure 4.
Time-dependence of the drain current for the power amplifier

4. Conclusions

In this paper, we have compared the HB and shooting methods for the determination of the LS working point in the physics-based simulation of semiconductor devices. The problem is particularly demanding from a computational standpoint, also because a full mixed mode simulation including the embedding circuit of the device has to be carried out.

We have implemented for the first time the shooting method for the physical simulation of devices forced by LS generators, and applied this and the HB technique to the simulation of two case studies from microwave applications: a down-conversion mixer and a class A power amplifier driven in strong nonlinearity. The comparison highlights that the shooting method appears more robust from a numerical standpoint, at least for strongly nonlinear conditions, while the HB approach yields better accuracy but is significantly more sensitive to the initial condition. In conclusion, a promising strategy appears to be as follows: the shooting method with a limited number of time points is first used to attain a good initial condition for the HB method, which is then used to get an accurate determination of the working point.

References

Aprille, T.J. and Trick, T.N. (1972), "Steady-state analysis of nonlinear circuits with periodic inputs", *Proceedings of the IEEE*, *Vol. 60 No. 1*, pp. 108-14.

Bonani, F., Donati Guerrieri, S. and Ghione, G. (2003), "Physics-based simulation techniques for small- and large-signal device noise analysis in RF applications", *IEEE Transactions on Electron Devices*, Vol. 50 No. 3, pp. 633-44.

Bonani, F., Donati Guerrieri, S., Ghione, G. and Pirola, M. (2001), "A TCAD approach to the physics-based modeling of frequency conversion and noise in semiconductor devices under large-signal forced operation", *IEEE Transactions on Electron Devices*, Vol. 48, pp. 966-77.

Bonani, F., Bertazzi, F., Conte, G., Donati Guerrieri, S. and Ghione, G. (2007), "Innovative techniques for device large-signal noise simulations", paper presented at 19th International Conference on Noise and Fluctuations, pp. 359-64.

Duan, X. and Mayaram, K. (2006), "Robust simulation of high-Q oscillators using a homotopy-based harmonic balance method", *IEEE Transactions on CAD of Integrated Circuits & Systems*, Vol. 25 No. 12, pp. 2843-51.

Gonzalez, G. (1984), *Microwave Transistor Amplifiers*, Prentice-Hall, Englewood Cliffs, NJ.

Hong, S-M., Park, C-H., Min, H-S. and Park, Y-J. (2006), "Physics-based analysis and simulation of phase noise in oscillators", *IEEE Transactions on Electron Devices*, Vol. 53 No. 9, pp. 2195-201.

Kundert, K.S. (1999), "Introduction to RF simulation and its application", *IEEE Journal of Solid-state Circuits*, Vol. 34 No. 9, pp. 1298-319.

Kundert, K.S., White, J.K. and Sangiovanni-Vincentelli, A. (1990), *Steady-state Methods for Simulating Analog and Microwave Circuits*, Kluwer Academic Publisher, Boston, MA.

Maas, S. (2005), *Noise in Linear and Nonlinear Circuits*, Artech House, Boston, MA.

Troyanovsky, B., Yu, Z. and Dutton, R.W. (2000), "Physics-based simulation of nonlinear distortion in semiconductor devices using the harmonic balance method", *Computer Methods in Applied Mechanics and Engineering*, Vol. 181, pp. 467-82.

About the authors

Francesco Bertazzi received the Laurea and PhD degrees in electronics engineering from the Politecnico di Torino, Turin, Italy, in 2000 and 2003, respectively. Since February 2004, he has been a Post-Doctoral Fellow with the Dipartimento di Elettronica, Politecnico di Torino. In 2005 he was a Visiting Scholar with the Department of Electrical and Computer Engineering at Boston University, Boston, MA. Most of his research activity has been focused on the modeling of traveling-wave structures for RF and optoelectronic devices. His research interests also include nonlinear physics-based noise analysis of RF and microwave devices.

Fabrizio Bonani was born in Torino, Italy, in 1967. He received the Laurea degree, *cum laude*, and the PhD degree in Electronic Engineering from Politecnico di Torino, Italy, in 1992 and 1996, respectively. Since 1995 he has been with the Electronics Department of the same institution, first as a Reasearcher and now, since 2001, as an Associate Professor of Electronics. His research interests are mainly devoted to the physics-based simulation of semiconductor devices, with special emphasis on the noise analysis of microwave field-effect and bipolar transistors, and to the thermal analysis of power microwave circuits. Part of his research concerns the analysis and simulation of nonlinear dynamical systems. From October 1994 to June 1995 he has been with the ULSI Technology Research Department of Bell Laboratories in Murray Hill (NJ) as a consultant, working on physics-based noise modelling of electron devices. He is Senior Member of IEEE and member of the IEEE MTT-14 Technical Committee on Low Noise Techniques. Fabrizio Bonani is the corresponding author and can be contacted at: fabrizio.bonani@polito.it

Simona Donati Guerrieri was born in 1969 in Milano, Italy. She received the degree in Theoretical Physics in 1993 from the University of Milano and the PhD in Electron Devices from University of Trento in 1999. She is presently working as a researcher in the Electonics Department of Politecnico of Torino, where she joined the microwave electronics group. Her research interests include the modelling and simulation of microwave solid state devices, including physics-based noise analysis, and the RF and microwave integrated circuit design. She is an IEEE member since 1997.

Giovanni Ghione was born in 1956 in Alessandria, Italy. He graduated *cum laude* in electronic engineering from Politecnico di Torino in 1981. Since 1983 he was a research assistant with Politecnico di Torino; from 1987 to 1990 an Associate Professor with Politecnico di Milano. In 1990 he joined the University of Catania as Full Professor of Electronics, and since 1991 he has covered the same position again at Politecnico di Torino, II Faculty of Engineering. Since 1981, he has been engaged in Italian and European research projects (ESPRIT 255, COSMIC and MANPOWER) in the field of active and passive microwave CAD. His present research interests concern the physics-based simulation of active microwave and optoelectronic devices, with particular attention to noise modelling, thermal modelling, active device optimization. His research interests also include several topics in computational electromagnetics, including coplanar component analysis. He has published more than 150 papers and book chapters in the above fields. He is member of the Editorial Board of the IEEE MTT Transactions, Fellow of the IEEE and member of the Associazione Elettrotecnica Italiana.