POLITECNICO DI TORINO
Repository ISTITUZIONALE

Transient Analysis of lossy transmission lines (TOPLine)

Original
Transient Analysis of lossy transmission lines (TOPLine) / Canavero, Flavio; Giachino, C.; GRIVET TALOCIA, Stefano; Maio, Ivano Adolfo; Stievano, IGOR SIMONE. - ELETTRONICO. - (2004), pp. 1-2. (Intervento presentato al convegno XX Riunione Annuale del Gruppo Nazionale di Coordinamento di Elettrotecnica (ET2004) tenutosi a Salerno, Italy nel June 16-19, 2004).

Availability:
This version is available at: 11583/1509765 since: 2015-07-15T09:41:15Z

Publisher:

Published
DOI:

Terms of use:

This article is made available under terms and conditions as specified in the corresponding bibliographic description in the repository

Publisher copyright

(Article begins on next page)

03 May 2024

TRANSIENT ANALYSIS OF LOSSY TRANSMISSION LINES (TOPLine)

F.G. Canavero, C. Giachino, S. Grivet-Talocia, I.A. Maio, I.S. Stievano

Dipartimento di Elettronica
Politecnico di Torino
Corso Duca degli Abruzzi, 24, 10129, Torino

Transmission lines structures at chip, multichip, package, board and subsystem level constitute one of the most critical parts for the signal integrity of all electronic systems. Nonetheless, their accurate and efficient transient analysis is still a challenging task even in the most advanced circuit solvers. It is well known that accurate interconnect models must take into account metal (skin effect) and dielectric losses, which lead to possibly large attenuation at increasing frequency. The underlying physics is best captured using a frequency-domain approach, leading to constitutive parameters with a complex dependence on frequency. A robust approximation is therefore required for the conversion to time domain of the constitutive line equations and the subsequent generation of a line macromodel to be employed in a transient simulation [1].

A particular line macromodeling strategy working in the general framework of the well-known Method of Characteristics (MoC) was developed, implemented and validated. This technique draws its origin from the Branin's method first introduced for lossless transmission lines. Here we employ a generalized version that allows to deal with multiconductor lines whose per-unit-length parameter matrices have a possibly complex dependence on frequency. In such case, both the characteristic admittance and the propagation operators of the line are frequency-dependent. A line macromodel is obtained via the following steps. First, the line equations are projected onto their high-frequency asymptotic modes. This leads to a particular form of the propagation operator that allows an easy extraction of the line modal delays. A second step is the generation of a rational approximation of characteristic admittance and delayless propagation operators in the Laplace domain. The last step is the translation of the rational expressions into equivalent circuits that can be implemented into a standard circuit solver. The resulting macromodel, named TOPLine [2], has been applied for the transient analysis of complex transmission line structures for high-speed digital signaling at package and board level. We considered structures with a large number conductors (plus reference) with excellent accuracy and efficiency.

As an application example, we present a lossy board coupled line with loading networks including three lossless (ideal) lines as is shown in the figure. All the RLCG line parameters are frequency-dependent in order to include metal (skin) and dielectric losses. The input signal is a saturated ramp with rise time $t_r = 0.035$ ns. For this particular structure we have linear termination networks. Therefore, a full validation is possible by using a standard frequency-domain solution and inverse FFT for the computation of the transient responses [3]. The results for some of these responses on a 20cm line segment are depicted in Fig. 1. The transient solution employing the proposed macromodel was computed in a fraction of a second on a Pentium IV-based PC (1.8 GHz) using IBM PowerSPICE circuit solver. The results are not distinguishable on this scale from the reference solution. Therefore, we can conclude that the accuracy of the proposed macromodeling algorithm is very good.

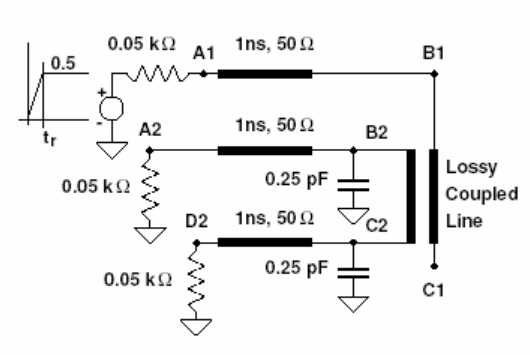

Fig. 1. Coupled transmission line on a board.

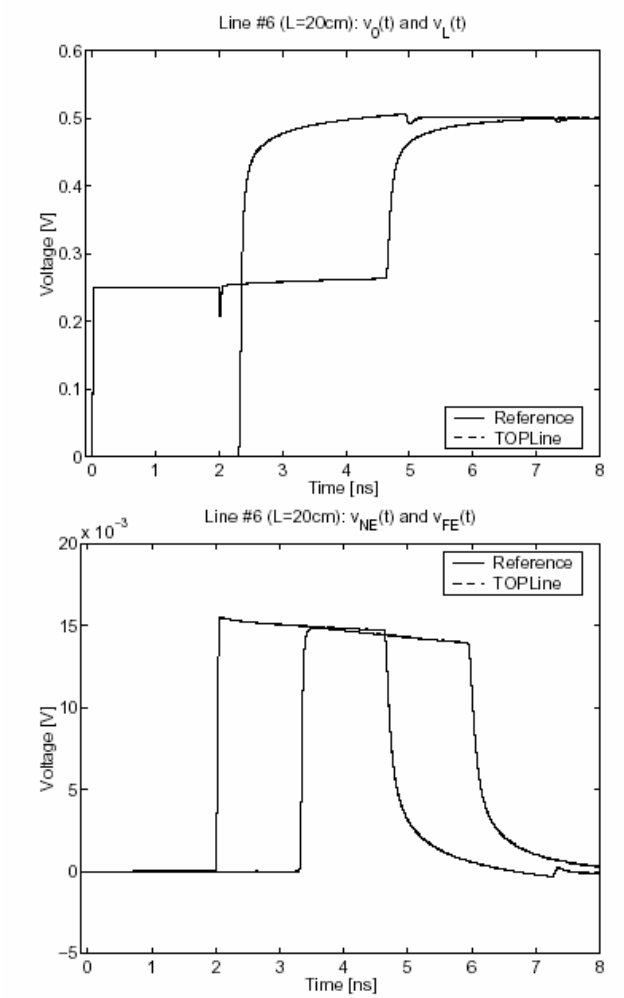

Fig. 2. Transient voltages at near and far terminations of active line (top panel) and victim line (bottom panel) of Fig. 1.

References

[1] I.S. Stievano, Z. Chen, D. Becker, F. Canavero, S. Grivet Talocia, G. Katopis, I.A. Maio, "Modeling of on-board and on-chip interconnected digital devices," *Proc. International Symposium on Electromagnetic Compatibility,* Sorrento (Italy), Sept. 2002, pp. 27-32.

[2] S. Grivet-Talocia, F.G. Canavero, "TOPLine: a delay-pole-residue method for the simulation of lossy and dispersive interconnects," *Proc. Digest Electrical Performance in Electronic Packaging,* Monterey (CA), USA, Oct. 2002, pp. 359-362.

[3] S. Grivet-Talocia, H-M. Huang, A.E. Ruehli, F. Canavero, I.M.A. Elfadel, "Transient analysis of lossy transmission lines: an efficient approach based on the method of characteristics," *IEEE Transactions on Advanced Packaging*, Vol. 27, No. 1, pp. 45-56, Feb 2004.