POLITECNICO DI TORINO
Repository ISTITUZIONALE

Simple technique for measuring source reflection coefficient while characterizing active devices

Original
Simple technique for measuring source reflection coefficient while characterizing active devices / Madonna, G.; Ferrero, ANDREA PIERENRICO. - In: IEEE TRANSACTIONS ON MICROWAVE THEORY AND TECHNIQUES. - ISSN 0018-9480. - 50:(2002), pp. 564-569.

Availability:
This version is available at: 11583/1400349 since:

Publisher:
IEEE

Published
DOI:

Terms of use:

This article is made available under terms and conditions as specified in the corresponding bibliographic description in the repository

Publisher copyright

(Article begins on next page)

12 October 2024

Simple Technique for Measuring Source Reflection Coefficient While Characterizing Active Devices

GianLuigi Madonna, *Member, IEEE,* and Andrea Ferrero, *Member, IEEE*

***Abstract*—The measurement of the source reflection coefficient is fundamental for noise, as well as large-signal testing of microwave active devices. This paper describes a simple yet rigorous technique for fast and accurate determination of a source reflection coefficient when a load–source pull test set is used. The solution consists in measuring the waves at the device-under-test reference plane under two different bias conditions. We have proven that these measurements give enough information to compute the source reflection coefficient with accuracy suitable for most applications. Experimental results are presented and compared to data obtained with more conventional techniques.**

***Index Terms*—Active device characterization, error box, microwave measurements, network analyzer calibration, source impedance, source–pull, source reflection coefficient.**

I. Introduction

THE measurement of the source reflection coefficient Γ_S is usually necessary for noise testing of microwave active devices, along with the usual S-parameters. However, Γ_S plays an important role also when nonlinear device characterization is required since the basic transistor performances (such as input and output power levels, intermodulation products, efficiency) are also functions of the input and output ports loading conditions. Typical application is the design of low-noise amplifiers, mixers, oscillators, power amplifiers, and high-efficiency integrated circuits (ICs).

Fig. 1 shows a load–source pull test set, which became common over the last decade for nonlinear characterization [1]–[6]. Two mismatch boxes set the source and load conditions, respectively at the input and output ports; those systems can be passive mechanical tuners or the more recent active tuners [1]. An automatic vector network analyzer (VNA) and two reflectometers measure the waves at the reference planes of the device-under-test (DUT). The use of in-place reflectometer allows to measure all the DUT waves in real time and without a tuner precalibration. As a drawback, the reflectometers introduce extra loss, which reduces the magnitude of the reflection coefficients available at the DUT ports unless active tuner systems are used [2].

The reflectometer of port 1 allows calibrated measurements of the DUT input reflection coefficient $\Gamma_{\rm in}$ as

$$\Gamma_{\rm in} = \frac{b_1}{a_1}. \tag{1}$$

Manuscript received November 4, 1999.

G. Madonna is with Infineon Technologies AG, 81739 Munich, Germany (e-mail: Gian-Luigi.Madonna@infineon.com).

A. Ferrero is with the Dipartimento di Elettronica, Politecnico di Torino, 10129 Turin, Italy (e-mail: ferrero@polito.it).

Publisher Item Identifier S 0018-9480(02)01170-5.

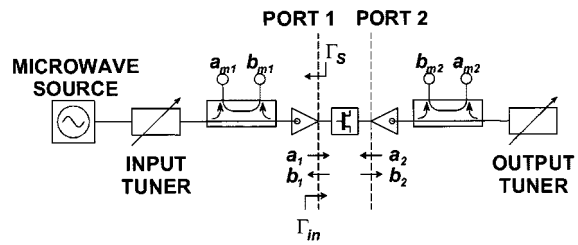

Fig. 1. Simplified block scheme of a traditional test set for source and load–pull characterization of active devices.

Equation (1) defines the relationship between the waves at the input reference plane set by the DUT. On the other side, the microwave source imposes

$$a_1 = a_S + \Gamma_S b_1 \tag{2}$$

where Γ_S is, by definition, the source reflection coefficient. From (2), it results

$$\Gamma_S = \frac{a_1}{b_1}\left(1 - \frac{a_S}{a_1}\right). \tag{3}$$

A single measurement of a_1, b_1 is not sufficient to compute the source reflection coefficient. As a matter of fact, Γ_S is equal to the ratio a_1/b_1 only if $a_S = 0$, i.e., the internal generator is switched off.

To measure Γ_S, Hughes *et al.* [3] proposed the solution shown in Fig. 2(a). First, the source switch is set to position 1 and the DUT input gamma is computed by (1). The source switch is then turned to position 2 and a second acquisition of waves a_1, b_1 is performed. From (3), the source reflection coefficient is simply the ratio $\Gamma_S = a_1/b_1$ since the source term is null. This simple technique relies on two basic assumptions. First, the DUT is not unilateral, thus, a significant portion of the source signal from port 2 can reach the input reflectometer. Moreover, the reflection coefficient of the source switch Γ_{sw} does not change while turning the switch from position 1 to 2.

An entirely different approach is described in [4] and sketched in Fig. 2(b). Here, the signal from the microwave source is summed with the wave reflected by the tuning element and injected into the DUT. The reflectometer is used in an unconventional configuration (referred to as *reverse*) and it directly monitors the tuner coefficient Γ_t. After a proper calibration procedure, Γ_S is directly available, but, this time, it is the DUT reflection coefficient $\Gamma_{\rm in}$ that cannot be determined.

The method shown in Fig. 2(c) solves the latter problem in two steps [5]. First, the microwave signal is injected before the reflectometer and the DUT input characteristic is computed. It

0018–9480/02$17.00 © 2002 IEEE

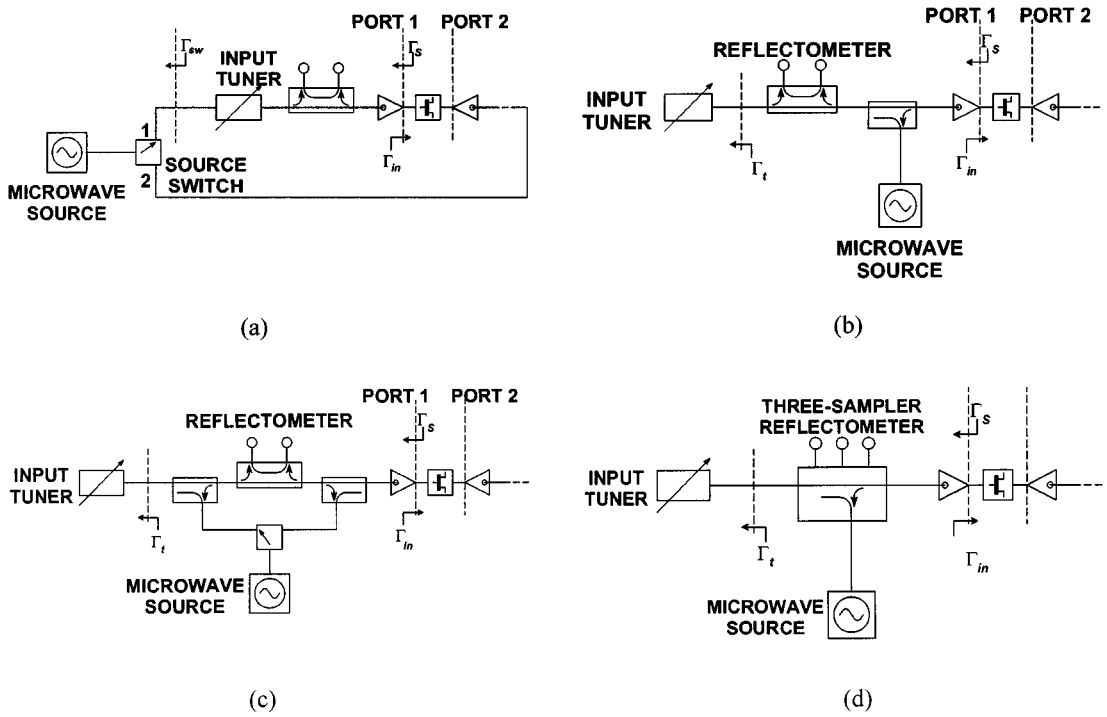

Fig. 2. Existing solutions for source reflection coefficient measurement.

is then switched immediately after, and the source reflection coefficient is measured by the reflectometer in the reverse configuration. Again, the switch reflection coefficient is assumed constant while changing the switch position.

As common feature, all the previous techniques measure the DUT and the source reflection coefficients by two different steps; this can be time consuming for fast and automatic characterization of active devices. The authors recently proposed a new technique based on the concept of a three-sampler reflectometer [see Fig. 2(d)]. It allows the simultaneous determination of the source and DUT input gamma. This technique is indeed fast and accurate, but it is based on an unconventional error model and it requires a special-purpose calibration procedure [6].

The solution described here is a simple yet rigorous technique for determining the source reflection coefficient while characterizing active devices. Briefly, it consists of measuring the waves at the input reference plane under two different DUT bias conditions. The variations of the DUT input waves due to the bias change give enough information to compute the source reflection coefficient with accuracy sufficient for most applications. Details are given in the following section. Afterwards, the calibration problem will be discussed. Finally, experimental results will be presented, along with some consideration on measurement accuracy.

II. Novel Solution

In order to compute the source reflection coefficient, two different bias conditions are applied to the active DUT. Its input gamma depends on the bias voltages so that the waves a_1 and b_1 are different in the two conditions. Let them be a_1', b_1' and a_1'', b_1'', where the apices identify the two bias conditions. Since we only change the DUT bias, the source signal a_S and Γ_S do not change in the two situations. Therefore, two equations like (2) are stacked to form the linear system

$$\begin{cases} a_1' = a_S + \Gamma_S b_1' \\ a_1'' = a_S + \Gamma_S b_1''. \end{cases} \tag{4}$$

The solution of (4) gives the source reflection coefficient as a function of the corrected waves

$$\Gamma_S = \frac{a_1' - a_1''}{b_1' - b_1''} \tag{5}$$

provided that all the quantities in (5) are referred to the same independent reference signal.

The novel technique possesses some noteworthy features as follows.

- It is rigorous since it is not based on the repeatability of a microwave source switch.
- It is safe and suitable for source– and load–pull characterization of unilateral devices since it does not require to excite the DUT back from port 2 (as required in [3]).
- It is flexible since it can be successfully applied to different source–pull test-set configurations [see, e.g., Fig. 2(a) and (b)].
- The correction for systematic errors is based on the traditional error-box model and it does not require any particular calibration procedures, as pointed out in the following section.

III. Calibration and Deembedding

The calibration theory is based on the well-known error-box model for nonleaky network analyzers [7]. The relationship be-

tween measured quantities a_{m1}, b_{m1} and real waves a_1, b_1 at the DUT port 1 reference plane is

$$\begin{bmatrix} b_{m1} \\ a_1 \end{bmatrix} = \begin{bmatrix} e_1^{00} & e_1^{01} \\ e_1^{10} & e_1^{11} \end{bmatrix} \begin{bmatrix} a_{m1} \\ b_1 \end{bmatrix} \tag{6}$$

or

$$\begin{bmatrix} b_1 \\ a_1 \end{bmatrix} = \frac{1}{e_{01}} \begin{bmatrix} 1 & -e_1^{00} \\ e_1^{11} & -\Delta_1 \end{bmatrix} \begin{bmatrix} b_{m1} \\ a_{m1} \end{bmatrix} \tag{7}$$

where $\Delta_1 = e_1^{00}e_1^{11} - e_1^{10}e_1^{01}$. The corrected DUT input reflection coefficient is computed by the formula

$$\Gamma_{\text{in}} = \frac{b_1}{a_1} = \frac{\Gamma_{m,in} - e_1^{00}}{e_1^{11}\Gamma_{m,in} - \Delta_1} \tag{8}$$

where $\Gamma_{m,in} = b_{m1}/a_{m1}$.

Substituting (7) in (5) gives (after simple manipulations) the deembedding formula for the source reflection coefficient

$$\Gamma_S = \frac{e_1^{11} - \Delta_1\Gamma_{mS}}{1 - e_1^{00}\Gamma_{mS}} \tag{9}$$

where

$$\Gamma_{mS} = \frac{a'_{m1} - a''_{m1}}{b'_{m1} - b''_{m1}}. \tag{10}$$

The quantities a'_{m1}, b'_{m1} and a''_{m1}, b''_{m1} in (10) are the raw waves measured under the two bias conditions.

As opposite to [6], only classical error coefficients are involved in the deembedding equation. They are computed by any conventional calibration algorithm for one- or two-port network analyzers.

IV. Considerations on Measurement Accuracy

Error propagation from waves a_1, b_1 to the source reflection coefficient Γ_S was studied. Let $\delta a = \delta a_1 = \delta b_1$ be the uncertainty that affects a_1 and b_1 measurements. By differentiating (5), Γ_S uncertainty is equal, in the worst case, to

$$\frac{\delta\Gamma_S}{|\Gamma_S|} = \frac{\delta a' + \delta a''}{|a'_1 - a''_1|} + \frac{\delta b' + \delta b''}{|b'_1 - b''_1|} = \frac{\delta a\big(1 + |\Gamma_S|\big)}{|a'_1 - a''_1|}. \tag{11}$$

From (1) and (2), it results

$$a = \frac{a_S}{1 - \Gamma_S\Gamma_{\text{in}}} \tag{12}$$

and, thus,

$$\frac{1}{a'_1 - a''_1} = \frac{(1 - \Gamma_S\Gamma'_{\text{in}})(1 - \Gamma_S\Gamma''_{\text{in}})}{\Gamma_S a_S(\Gamma'_{\text{in}} - \Gamma''_{\text{in}})} \tag{13}$$

where Γ'_{in} and Γ''_{in} are the DUT input reflection coefficients under the two bias conditions. The overall uncertainty becomes

$$\delta\Gamma_S = 2\big(1 + |\Gamma_S|\big)\,\frac{|1 - \Gamma_S\Gamma'_{\text{in}}||1 - \Gamma_S\Gamma''_{\text{in}}|}{|\Gamma'_{\text{in}} - \Gamma''_{\text{in}}|}\,\frac{\delta a}{|a_S|}. \tag{14}$$

Equation (14) proves that the larger the variation of the DUT input gamma $|\Gamma'_{\text{in}} - \Gamma''_{\text{in}}|$ is, the smaller the Γ_S uncertainty is, as is obvious.

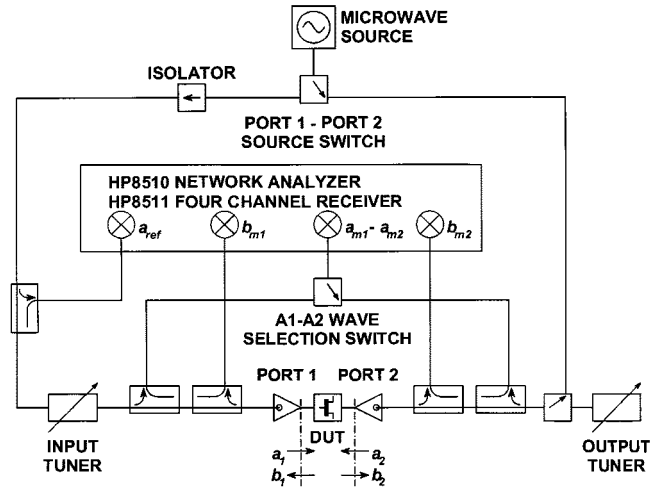

Fig. 3. Integrated S-parameter and source–/load–pull on-wafer test set used to verify the novel technique for Γ_S measurement.

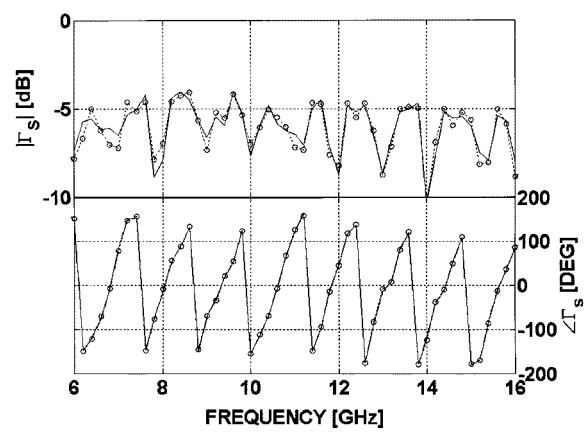

Fig. 4. Source reflection coefficient for a single tuner setting: $\Gamma_{S,1}$ (new technique: continuous line), $\Gamma_{S,2}$ (traditional technique: dotted line with $\circ$). No isolator is used.

To proceed further, it must be noted that if different Γ_S values are set, the source term a_S in (14) may also vary. The relationship between a_S and Γ_S depends only on the circuit used to control the source reflection coefficient. For our experiments, a simple mechanical tuner was used, as shown in Fig. 3. In the Appendix, it is proven that, in this case, a good model is

$$|a_S|^2 = |a_{S0}|^2\big(1 - \alpha|\Gamma_S|^2\big), \qquad \text{if } |\Gamma_S|^2 < \frac{1}{\alpha} \tag{15}$$

where a_{S0} is constant with Γ_S and α is a nonnegative parameter that can be determined experimentally. In our case, simple fitting algorithm gave $\alpha \approx 2.3$. Equation (14) becomes

$$\delta\Gamma_S = f(\Gamma_S)\,\frac{\delta a}{|a_{S0}|} \tag{16}$$

where

$$f(\Gamma_S) = \frac{2\big(1 + |\Gamma_S|\big)}{\big(1 - \alpha|\Gamma_S|^2\big)^{1/2}}\,\frac{|1 - \Gamma_S\Gamma'_{\text{in}}||1 - \Gamma_S\Gamma''_{\text{in}}|}{|\Gamma'_{\text{in}} - \Gamma''_{\text{in}}|}. \tag{17}$$

In the following, we will experimentally prove the effectiveness of this formulation to highlight the Γ_S measurement accuracy of the new technique.

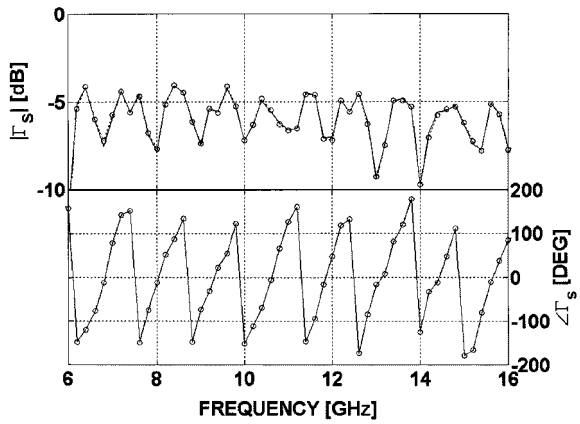

Fig. 5. Source reflection coefficient for a single tuner setting with an isolator between the tuner and the source switch: $\Gamma_{S,1}$ (new technique: continuous line), $\Gamma_{S,2}$ (traditional technique: dotted line with $\circ$).

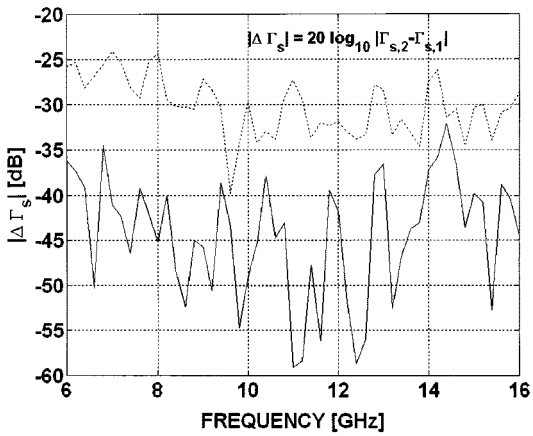

Fig. 6. Differences between Γ_S values computed by different techniques: with the isolator between the tuner and source switch (continuous line) and without it (dotted line).

V. Experimental Results

The solution presented in this paper was applied to the integrated S-parameter and source–/load–pull on-wafer test set sketched in Fig. 3. A traditional network analyzer is used as a four-channel microwave receiver. Signal a_{ref} is drawn from the generator output to provide a stable reference for phase locking. Waves a_1 and a_2 are selected by a p-i-n diode switch driven directly by the network analyzer. This is a well-established technique already experimented in many load–pull systems [8], [9] and it allows fast acquisitions of all four DUT waves.

The novel technique was applied to measure the source reflection coefficient during on-wafer load–pull high electron-mobility transistor (HEMT) characterization. Measurements were made at different input tuner settings. Results were compared with the ones obtained by the traditional technique described in [3]. In detail, for each tuner setting: 1) the DUT was driven by port 1 and the source reflection coefficient was computed by the new "two-bias" method, obtaining Γ_{S1} and then 2) the source signal was switched to port 2, the device was substituted by a *thru* connection, and the source reflection coefficient was directly measured as a_1/b_1, obtaining Γ_{S2}. To compute Γ_S by the "two-bias" technique, the DUT bias was simply turned on and off.

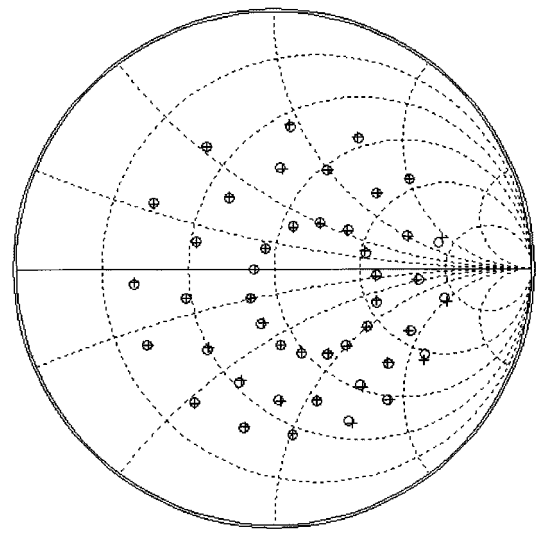

Fig. 7. Source reflection coefficient values at 10 GHz for various tuner settings, computed by different techniques: $\Gamma_{S,1}$ (new technique: $+$), $\Gamma_{S,2}$ (traditional technique: $\circ$).

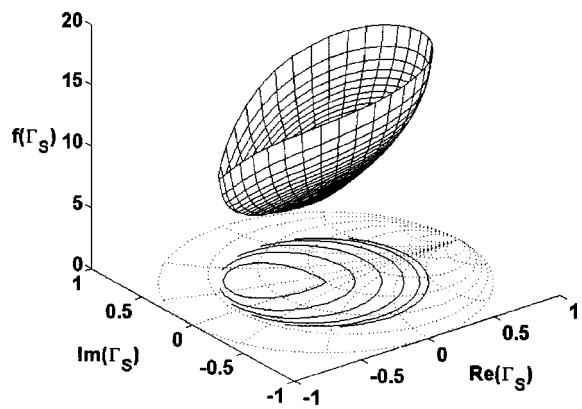

(a)

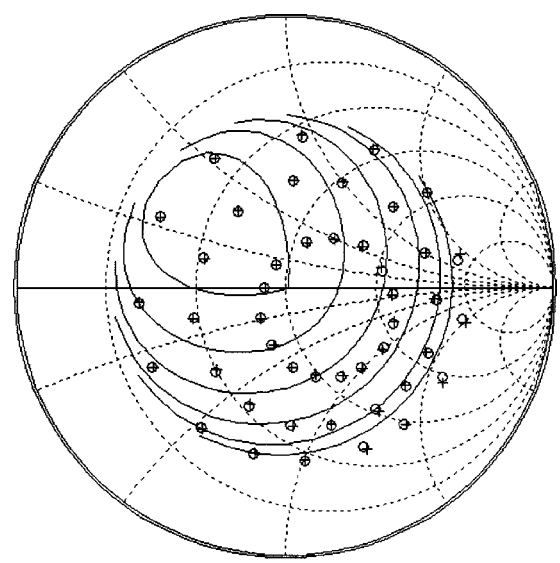

(b)

Fig. 8. Error propagation factor $f(\Gamma_S)$, defined in (17), as a function of Γ_S.

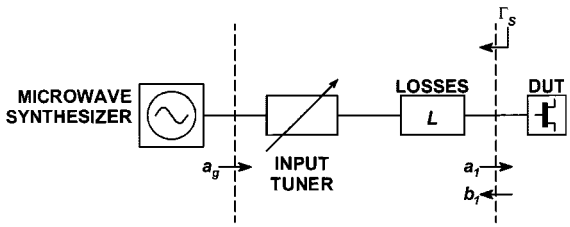

Fig. 9. Simple model used to compute the relationship between a_S and Γ_S.

Fig. 4 shows the results for a single tuner setting as a function of frequency. The small difference between Γ_{S1} and Γ_{S2} plots was attributed mainly to systematic errors affecting Γ_{S2}. In particular, moving the source signal from ports 1 to 2 slightly changes the switch reflection coefficient Γ_{sw} that the input tuner sees. To prove this statement, we inserted an isolator between the input tuner and source switch. In this case, the difference between Γ_{S1} and Γ_{S2} is considerably smaller, as shown in Figs. 5 and 6.

Residual differences between Γ_{S1} and Γ_{S2} was attributed to the uncertainty of the "two-bias" method. Fig. 7 shows different measured values obtained at a single frequency for as many input tuner positions. On the other side, Fig. 8(a) shows the error propagation factor defined in (17) as a function of Γ_S. Finally, in Fig. 8(b), the contour plot of $f(\Gamma_S)$ is superimposed to the measured values Γ_{S1} and Γ_{S2}. It is easy to note that the two techniques better agree where function $f(\Gamma_S)$ has a minimum.

VI. Conclusions

A novel technique has been presented to measure the source reflection coefficient while characterizing active devices. Due to its simplicity, the technique is an interesting solution that can be applied in several situations. Experimental comparisons with traditional methods have proven that its accuracy is sufficient for most of applications.

Appendix

In Fig. 9, a mechanical passive tuner is connected between the microwave synthesized generator and the DUT. A two-port circuit with insertion loss L takes account of losses in the cables, reflectometer, and probe.

Since the tuner is reciprocal, its scattering matrix has the form

$$\mathbf{S} = \begin{bmatrix} S_{11} & S_{21} \\ S_{21} & S_{22} \end{bmatrix}. \tag{18}$$

Assuming the microwave synthesizer is perfectly matched, the source reflection coefficient seen by the DUT is

$$\Gamma_S = \frac{S_{22}}{L^2}. \tag{19}$$

On the other side, the source term a_S, defined in (2), is

$$a_S = a_1|_{b_1=0} = \frac{S_{21}}{L}\, a_g. \tag{20}$$

If the tuner is assumed to have no losses, then matrix $\mathbf{S}$ is Hermitian. In particular,

$$|S_{21}|^2 + |S_{22}|^2 = 1. \tag{21}$$

From (19)–(21), it results

$$|a_S|^2 = |a_{S0}|^2\Big(1 - \alpha|\Gamma_S|^2\Big) \tag{22}$$

where $a_{S0} = a_g/L$ and $\alpha = L^4$. Coefficient α is also related to the maximum source reflection coefficient that can be set. In fact, since the tuner is passive

$$|S_{22}|^2 < 1 \tag{23}$$

and, from (19),

$$|\Gamma_S|^2 < |\Gamma_{S,\max}|^2 = 1/\alpha. \tag{24}$$

In our case, the quantity $|a_S|^2$ was directly computed by measuring Γ_S by the "two-bias" technique and $|a_1|^2$ after a proper power calibration [10]. Least-squares fitting of (22) with experimental data gave $\alpha \approx 2.3$. From (24), it means $|\Gamma_{S,\max}| \approx 0.66$, which is in good agreement with the maximum source reflection coefficient obtained in Fig. 7 and the loss of our input reflectometer.

References

[1] F. Blache, J. M. Nebus, P. Bouysse, and J. P. Villotte, "A novel computerized multiharmonic active load–pull system for the optimization of high efficiency operating classes in power transistors," in *IEEE MTT-S Int. Microwave Symp. Dig.*, May 1995, pp. 1037–1040.

[2] G. P. Bava, U. Pisani, and V. Pozzolo, "Active load technique for load–pull characterization at microwave frequencies," *Electron. Lett.*, vol. 18, no. 4, pp. 178–179, Feb. 1982.

[3] B. Hughes and P. Tasker, "Improvements to on-wafer noise parameter measurements," in *36th ARFTG Conf. Dig.*, Monterey, CA, Nov. 1990, pp. 16–25.

[4] D. Le and F. Ghannouchi, "Source–pull measurements using reverse six-port reflectometers with application to MESFET mixer design," *IEEE Trans. Microwave Theory Tech.*, vol. 42, pp. 1589–1595, Sept. 1994.

[5] G. Berghoff, E. Gergeault, B. Huyart, and L. Jallet, "Automated characterization of HF power transistor by source–pull and multiharmonic load–pull measurements based on six-port techniques," *IEEE Trans. Microwave Theory Tech.*, vol. 46, pp. 2068–2073, Dec. 1998.

[6] G. Madonna, M. Pirola, A. Ferrero, and U. Pisani, "Testing microwave devices under different source impedances: A novel technique for on-line measurement of source and device reflection coefficients," in *Proc. IMTC'99 Conf.*, Venezia, Italy, pp. 130–133.

[7] H. H. Eul and B. Schieck, "A generalized theory and new calibration procedures for network analyzer self-calibration," *IEEE Trans. Microwave Theory Tech.*, vol. 39, pp. 724–731, Apr. 1991.

[8] B. Hughes, A. Ferrero, and A. Cognata, "Accurate on-wafer power and harmonic measurements of mm-wave amplifiers and devices," in *IEEE MTT-S Int. Microwave Symp. Dig.*, Albuquerque, NM, June 1992, pp. 1019–1022.

[9] D. Barataud, C. Arnaud, B. Thibaud, M. Campovecchio, J. M. Nebus, and J. P. Vilotte, "Measurements of time-domain voltage/current waveforms at RF and microwave frequencies based on the use of a vector network analyzer for characterization of nonlinear devices—Application to high-efficiency power amplifiers and frequency-multipliers optimization," *IEEE Trans. Instrum. Meas.*, vol. 47, pp. 1259–1264, Oct. 1998.

[10] A. Ferrero and U. Pisani, "An improved calibration technique for on-wafer large-signal transistor characterization," *IEEE Trans. Instrum. Meas.*, vol. 47, pp. 360–364, Apr. 1993.

GianLuigi Madonna (S'94–M'95) was born in Alessandria, Italy, in 1970. He received the Electronic Engineering degree and Ph.D. degree in electronics from the Politecnico di Torino, Turin, Italy, in 1996 and 2000, respectively.

In 1996, he joined the Microwave Technology Division, Hewlett-Packard, Santa Rosa, CA, where he was a summer student. Since January 2000, he has been with Infineon Technologies AG, Munich, Germany, where he is involved in heterojunction bipolar transistor (HBT)-based monolithic-microwave integrated-circuit (MMIC) design and characterization for wireless applications. His research interests include automation of RF measurement systems, calibration techniques development, and microwave device modeling.

Andrea Ferrero (S'85–M'85) born in Novara, Italy, in 1962. He received the Electronic Engineering degree and Ph.D. degree in electronics from the Politecnico di Torino, Turin, Italy, in 1987 and 1992, respectively.

In 1988, he joined the Aeritalia Company, where he was a microwave consultant. During 1991, he was with the Microwave Technology Division, Hewlett-Packard, Santa Rosa, CA, where he was a summer student. In 1995, he was with the Electrical Engineering Department, École Polytechnique de Montrèal, Montréal, QC, Canada, where he was a Guest Researcher. In 1998, he became an Associate Professor of electronic measurements at the Politecnico di Torino. His main research activities are in the area of microwave measurements techniques, calibration, and modeling.