POLITECNICO DI TORINO
Repository ISTITUZIONALE

Advanced least weight design optimization of additive manufactured space rover steering brackets

Original
Advanced least weight design optimization of additive manufactured space rover steering brackets / Festa, L. M.; Pagani, A.; Corpino, S.. - ELETTRONICO. - (2022). (Intervento presentato al convegno 73rd International Astronautical Congress (IAC) tenutosi a Paris, France nel 18-22 September, 2022).

Availability:
This version is available at: 11583/2976690 since: 2023-03-09T14:27:06Z

Publisher:
IAF Astro

Published
DOI:

Terms of use:

This article is made available under terms and conditions as specified in the corresponding bibliographic description in the repository

Publisher copyright
IAC/IAF postprint versione editoriale/Version of Record

Manuscript presented at the 73rd International Astronautical Congress (IAC), Paris, France, 2022. Copyright by IAF

(Article begins on next page)

12 October 2024

73rd International Astronautical Congress (IAC), Paris, France, 18-22 September 2022.
Copyright ©2022 by the International Astronautical Federation (IAF). All rights reserved.

IAC-22,C2,5,2,x72199

Advanced least weight design optimization of additive manufactured space rover steering brackets

Leonardo Maria Festa
Politecnico di Torino, Italy, leonardomaria.festa@studenti.polito.it

Alfonso Pagani
Politecnico di Torino, Italy, alfonso.pagani@polito.it

Sabrina Corpino
Politecnico di Torino, Italy, sabrina.corpino@polito.it

Marco Mazzetti
Politecnico di Torino, Italy, marcomazzetti9595@gmail.com

Abstract

This work proposes the use of advanced finite element modelling in conjunction with a state-of-the-art optimization algorithm for carrying out least-weight design through topology analysis and fine optimization of space rover steering structural components. The developed design methodology relies on many software. The first step's goal is to define the rough geometry of the component, for this purpose *Hexagon MSC Apex*, *Hexagon MSC Nastran with Patran* and *Workbench Ansys* are used. Later, a parametric FEM model is created using *Dassault Solidworks* and *Workbench Ansys*. Finally, the design space is explored using *ESTECO modeFRONTIER* and a multi-criteria decision-making algorithm is implemented to find an optimal solution. The optimized components were produced by taking advantage of advanced additive manufacturing technologies which permits unique freedom in components geometry. As a matter of fact, it is demonstrated that the parts designed with the proposed topological optimization method weigh consistently less than the traditional counterparts, still satisfying the required robustness and stiffness requirements. The entire project is developed in the framework of the DIANA student team from Politecnico di Torino, which compete in the Rover Challenge series, whose objective is to permit students from all the engineering areas, to gain hands-on experience in the space sector through the prototyping of an astronaut assistance rover.

Keywords: Topology optimization, FEM analysis, Weight reduction, 3D printing, Additive Manufacturing, Space Structures

1. Introduction

The concept of optimization has been studied by an ever-wider portion of scientists, engineers, etc. [1]. There are several optimizations that a project can benefit from. In the last few decades topology optimization has seen an ever-greater improvement and interest [2]. The best optimization results occur when the manufacturing constraints are low, so it is crucial to choose a proper production technology to benefit from a topology optimization design process, e.g., Additive Manufacturing gives much freedom in shaping the geometry [3] and can reduce prototyping costs [4].

Especially in the aerospace industry, topology optimization and additive manufacturing are spreading thanks to the possibility that this combination provides to simplify geometries and to reduce weight [5][6].

This work proposes the use of the Selective Laser Melting (SLM) technique applied to the AlSi10Mg aluminium [7] for its vast use in the industry and its mechanical properties [8].

The methodology presented in this paper aims to reduce the weight of the steering bracket of a planetary rover while keeping its structural properties. The process makes vast use of the state-of-the-art topology optimization algorithms and processes [9][10] but brings a better control on constraints and goals, both on structural properties and on shape.

After the mechanical requirements are defined, a FEM model is created to calculate stresses in the model and how a rough geometry behaves under operative conditions. The FEM is then used in this methodology for understanding the best geometry for the steering bracket of a technology demonstrator of a planetary rover.

Copyright ©2022 by the International Astronautical Federation (IAF). All rights reserved.

Then after the modelling of a parametric CAD model, a fine optimization is done by using *ESTECO modeFRONTIER* [11], a platform for multi-objective and multi-disciplinary optimization, exploring the component design space by changing key parameters while performing at each variation a structural static analysis on *Workbench Ansys*. *Figure* ***1*** reports a summary diagram of the methodology.

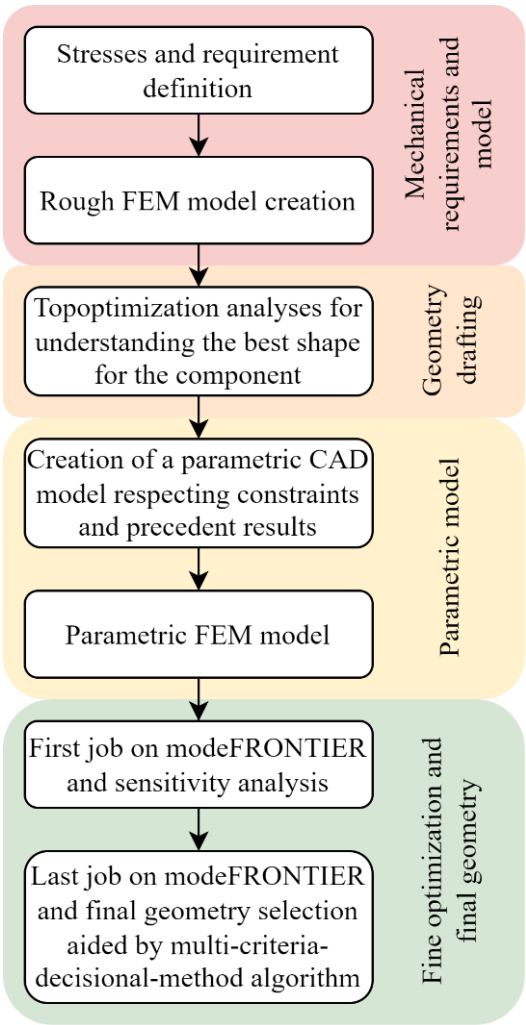

Figure 1: Summary diagram of the methodology

2. Mechanical Requirements

The rover locomotion system is based on a standard rocker-bogie configuration [12] with six elastic wheels four of which are capable of steering. The rover is strongly modular and with all the payloads can weigh up to 100 kg. Subtracting the weight of the wheels, which doesn't affect the brackets' stress condition, each steering bracket is loaded with 100N to which a 1.5 dynamic coefficient is applied.

The steering actuator applies its moment to the bracket through a gearbox, overall, the steering torque can reach 15 Nm. The wheel is actioned by a geared BLDC motor that can develop a 25 Nm torque (*Figure 2*).

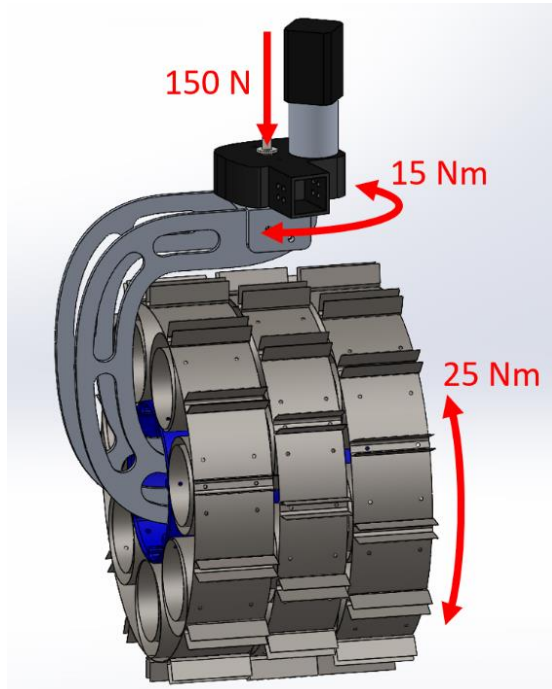

Figure 2: Applied load scheme

All FEM analyses carried out for this work implement this worst-case stress scheme and the AlSi10Mg aluminium is considered isotropic.

The component has also some integration constraints since has to interface with the gearbox shaft and with the wheel motor, moreover, the wheel must be free to rotate.

Once the mechanical requirements are defined a basic FEM model is implemented on *Hexagon MSC* Apex to explore the best implementing solution for the stress scheme and to understand how a rough geometry is stressed under operative conditions.

3. Geometry drafting

This step aims to investigate the best shape for the steering bracket. For this purpose, a series of Topological analyses *(Nastran* SOL200) [9], using *Hexagon MSC Nastran with Patran*, are performed on slightly different solid geometries, all compliant with the geometry constraints mentioned in the introduction but simplified.

The geometry is first shaped with *Dassault Solidworks* and then imported on *Patran* as Parasolid. The reasons behind the use of a CAD software are mainly its usability and the possibility to quickly split the

Copyright ©2022 by the International Astronautical Federation (IAF). All rights reserved.

geometry into simple bodies that *Patran* can mesh using only cubic "hex" elements.

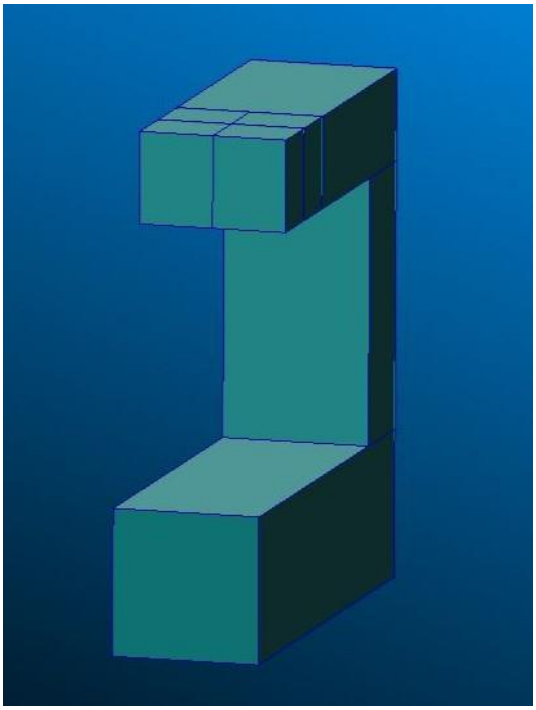

Figure 3 Simplified raw geometry

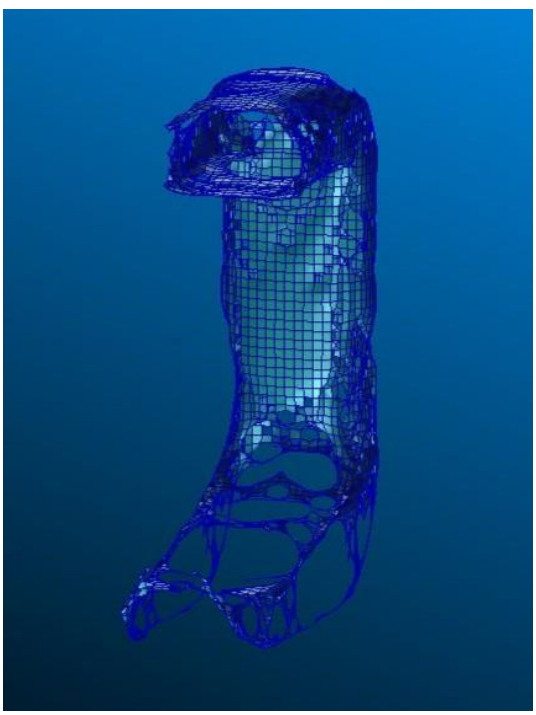

Figure 4 Topoptimized shape, 3D elements

Since this Nastran solution uses a density method approach [2], it is important to have a high number of elements in the model, otherwise, the resulting shape is worthless. The various FEM models used in this step have between 300000 and 500000 solid elements. The figures show a simplified bracket model (*Figure 3*) and the resulting shape after a SOL200 topoptimization (*Figure 4*). It is visible that the best shape must be something close to a hollow tube. By changing the threshold for density visualization in the post-process editor of *Patran*, it is visible that some parts can be thinner and that some hole lightening can be present.

4. Lightening raw positions

The step right after the geometry drafting is to explore the lightening position. This step involves the usage of *Nastran with Patran* and *Workbench Ansys*, which uses its own solver for topology optimization also based on the density method approach. Those two software are used for redundancy.

Once the shape is defined, is now important to understand where the lightening can be placed. This time the topology optimization analysis is made on models with 2D shell elements. On *Nastran with Patran* the model is made with all "quad" 2D shell elements, while on *Ansys* an auto-mesh mixed approach is used, and the elements can be either "quad" or "tria".

Both software tools confirm that there can be lightening elements on the surface; *Figure 5* shows clearly what are the suitable positions.

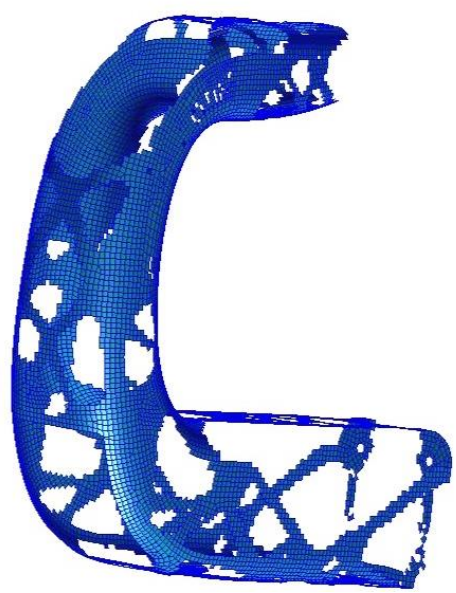

Figure 5: Patran post process topoptimized mesh.

Despite the good results obtained by now reducing the weight, there is no producible design, and the geometry is strongly connected to the elements' shape. In

Copyright ©2022 by the International Astronautical Federation (IAF). All rights reserved.

the next steps is shown how to create a feasible design based on what has been learnt from these preliminary analyses.

5. Parametric Model

The whole process of optimization relies on the design of a bracket CAD model that has parametric features. This CAD model will be very similar to the final one and will be interfaced with a FEM model on *Workbench Ansys*.

For this purpose, *Dassault Solidworks* has been used. The geometry is essentially a hollow tube with some lightening and some internal ribs increasing the stiffness and having a better behaviour under critical conditions and vibrations (*Figure 6*).

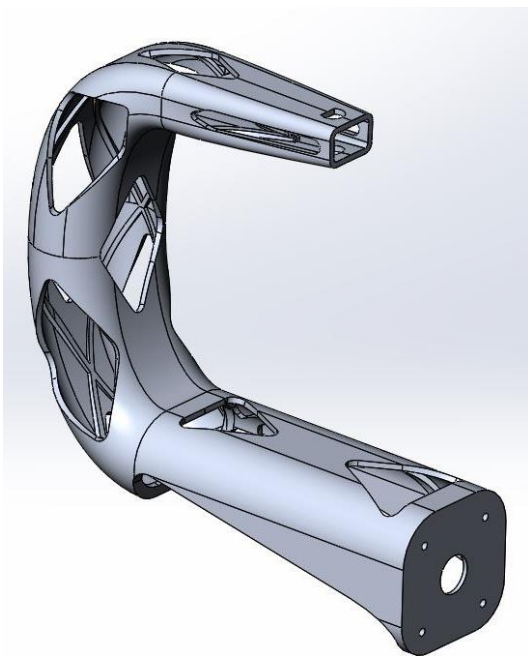

Figure 6: Parametric CAD.

Since *modeFRONTIER* will later change the parameters given exploring the design space, it is especially important to have a reliable CAD design that doesn't present rebuilding issues when dimensions are changed externally.

To make the dimensions vary in the geometry the variables shouldn't be connected to functions that constitute the geometry, it is much better to implement functions that can modify a stable and definitive design, e.g., "surface offset", and link them to the defined variables.

The variable parameters are:

- The thickness of each portion of skin between the twisted ribs
- The thickness of each rib
- The width of each rib

Later, some tests have been made changing variables values to understand how bis is the Design space, in which the optimization software will be able to move.

A structural static environment is created in *Workbench Ansys*, and the geometry is imported from *Solidworks*. The FEM model is created using solid "hex" elements. Constraints forces and moments are defined as in the previous steps, the material is defined using the AlSi10Mg properties and it is considered isotropic.

6. modeFRONTIER jobs

The last steps of the optimization have been made on *ESTECO modeFRONTIER*. In this environment, two jobs have been set and run. The workflow implemented on *modeFRONTIER* is based on the pilOPT algorithm, developed by *ESTECO* [13][14], which automatically decides how to mix genetics and gradient-based algorithms to quickly reach a good coverage of the Pareto front.

Figure 11 (Appendix A) shows the workflow of the first job; this run explores the design space by changing eleven parameters (*Table 1*) to minimize the deformation and the mass outputs of the *Ansys* FEM model [10]. Two constraints applied to *Ansys* outputs are also present, i.e., max stress and max deformation, which determine a non-feasible geometry when exceeded.

ID	PARAMETER
RT_1÷2	Rib Thickness
TA_1÷9	Thickness of the tube portion circumscribed by ribs intersecting

Table 1: First job parameters

The goal of this iteration is to make a sensitivity analysis of the design space with the tool integrated with the software to understand which parameters have more impact on the objectives.

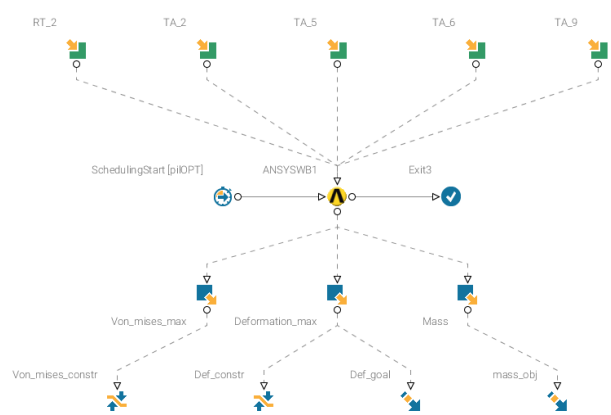

Figure 7: Final Job workflow.

Copyright ©2022 by the International Astronautical Federation (IAF). All rights reserved.

The final job on *modeFRONTIER* (*Figure 7*) has the same setup as the first one but the design space is defined by the parameters highlighted from the sensitivity analysis.

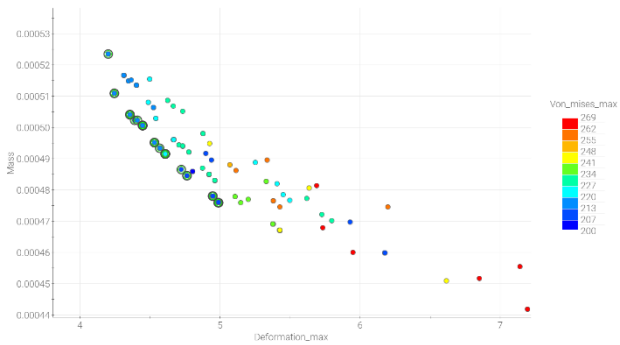

Figure 8: Each dot represents a different design. maximum deformation on the x-axis and mass on the y-axis. Dot colours represent Von Mises' maximum stress. Pareto dots are highlighted if respecting outputs constraints.

Figure 8 shows in a chart the feasible design generated by *modeFRONTIER*, the best solutions are represented by the dots disposed on the Pareto front.

To choose one solution among the Pareto ones a linear MCDM [15] (multi-criteria decisional method) algorithm was implemented using the tool present in *modeFRONTIER*. *Figure 12* shows the MCDM configuration, it is visible that more weight has been given to the stiffness property.

From this process a final and producible design has been finally chosen and, since *modeFRONTIER* saves every feasible design by default, the CAD model is already available.

7. Conclusions

The optimization process brought a 30% mass reduction while keeping the stiffness and functionality of the steering bracket. In *Figure 9* and *Figure 10*, it is visible the difference between the bracket designed for a standard production technique (laser cut and metal sheet bending) and the bracket designed for an innovative production technique (selective laser melting additive manufacturing). Both brackets are produced in an Aluminium alloy: respectively Al6061-T6 and AlSi10Mg. The 3D printed one weighs 521 grams while the other one is 759 grams.

Behaviour under critical conditions has been enhanced too thanks to the internal ribs and the hollow tube shape.

Using an additive manufacturing production technology it is also possible to reduce the number of components: in this case from two aluminium components plus four bolts with washers and nuts (*Figure 9*) to one single part (*Figure 10*). This can reduce failure risk under operative conditions and makes it possible to shorten the assembly time.

Figure 9: Standard production technique bracket

Figure 10: SLM production technique bracket

The design process described in this paper can also bring some side advantages to the system: a weight reduction in a mechanical component gives some

Copyright ©2022 by the International Astronautical Federation (IAF). All rights reserved.

freedom in optimizing other aspects of a space project e.g., payloads, amount of fuel, tank structure weight, etc.

This methodology applies to many different systems and subsystems and can be extended to include a vast variety of parameters and outputs with the goal of optimizing more aspects of the components.

Acknowledgements

The authors are pleased to express their gratitude to:

- All members of the student team DIANA from Politecnico di Torino: with their constant passion and work on planetary Rover technology demonstrator permitted this study.
- Politecnico di Torino and DIMEAS, which funds and sponsor all DIANA activities since 2008.
- All DIANA sponsors and partners who permit the team to prosper, and among them especially SPEM additive for the idea of shaping a steering bracket for additive manufacturing.

References

[1] Du, D.-Z., Pardalos, P. M., & Wu, W. History of Optimization. Encyclopedia of Optimization (Floudas, C., Pardalos, P. (eds)), 1538–1542 (2009) https://doi.org/10.1007/978-0-387-74759-0_268

[2] Sigmund, O., Maute, K. Topology optimization approaches. *Struct Multidisc Optim* **48**, 1031–1055 (2013). https://doi.org/10.1007/s00158-013-0978-6

[3] Zhu, JH., Zhou, H., Wang, C., Zhou, L., Yuan, S. & Zhang, WH. A review of topology optimization for additive manufacturing: Status and challenges. *Chinese Journal of Aeronautics* **34**, 91-110 (2020). https://doi.org/10.1016/j.cja.2020.09.020

[4] Khorram Niaki, M., Nonino, F., Palombi, G., Torabi, S.A. Economic Sustainability of Additive Manufacturing: Contextual Factors Driving Its Performance in Rapid Prototyping. *Journal of Manufacturing Technology Management* **30** 353–365 (2019) https://doi.org/10.1108/JMTM-05-2018-0131.

[5] Zhu, JH., Zhang, WH. & Xia, L. Topology Optimization in Aircraft and Aerospace Structures Design. *Arch Computat Methods Eng* **23**, 595–622 (2016). https://doi.org/10.1007/s11831-015-9151-2

[6] Liu, J., Gaynor, A.T., Chen, S. *et al.* Current and future trends in topology optimization for additive manufacturing. *Struct Multidisc Optim* **57**, 2457–2483 (2018). https://doi.org/10.1007/s00158-018-1994-3

[7] Trevisan, F., Calignano, F., Lorusso, M., Pakkanen, JA., Aversa, A., Ambrosio, EP., Lombardi, M., Fino, P., Manfredi DG. On the Selective Laser Melting (SLM) of the AlSi10Mg Alloy: Process, Microstructure, and Mechanical Properties. *Materials* **10**, 76-98 (2017) https://doi.org/10.3390/ma10010076

[8] Kempen, K., Thijs, L., Van Humbeeck, J., Kruth, JP. Mechanical Properties of AlSi10Mg Produced by Selective Laser Melting. *Physics Procedia* **39**, 439-446 (2012) https://doi.org/10.1016/j.phpro.2012.10.059

[9] YU, Xiaoming; JOHNSON, Erwin H.; ZHANG, Shenghua. Discrete Optimization in MSC/NASTRAN®. In: MSC World User's Conference. 2000.

[10] De Weck, O. L. (2004, October). Multiobjective optimization: History and promise. In Invited Keynote Paper, GL2-2, The Third China-Japan-Korea Joint Symposium on Optimization of Structural and Mechanical Systems, Kanazawa, Japan (Vol. 2, p. 34).

[11] ESTECO modeFRONTIER official website, https://engineering.esteco.com/modefrontier/ (accessed 26.08.2022).

[12] Jun, Y., Mingming, D., Jiatong, Y. A Literature Review of the Rocker-Bogie Suspension for the Planetary Rover, Proceedings of the 2017 International Seminar on Artificial Intelligence, Networking and Information Technology (ANIT 2017)

[13] ESTECO Brochure Numerics 2018, Effective Optimization Driven Design: ESTECO numerical technology enables efficient Design Space Exploration and Optimization processes https://www.esteco.com/system/files/BROCHURE_numerics_2018_R2_web.pdf (accessed 29.08.2022).

[14] Optimization Leader: ESTECO, 1st December 2014,https://www.digitalengineering247.com/article/optimization-leader-esteco (accessed 26.08.2022).

[15] Triantaphyllou, E. (2000). Multi-Criteria Decision Making Methods. In: Multi-criteria Decision Making Methods: A Comparative Study. Applied Optimization, vol **44**. Springer, Boston, MA. https://doi.org/10.1007/978-1-4757-3157-6_2

Copyright ©2022 by the International Astronautical Federation (IAF). All rights reserved.

Appendix A (One column Figures)

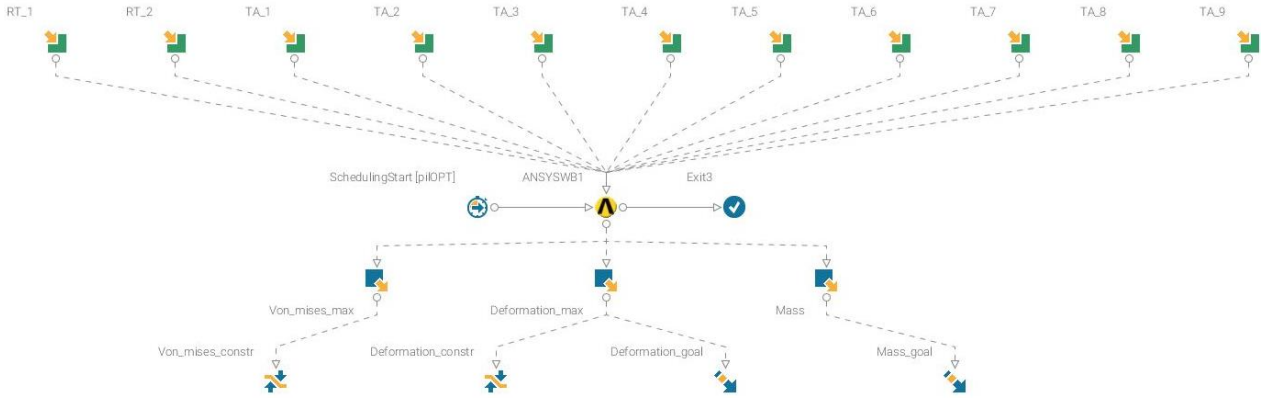

Figure 11: modeFRONTIER first job workflow.

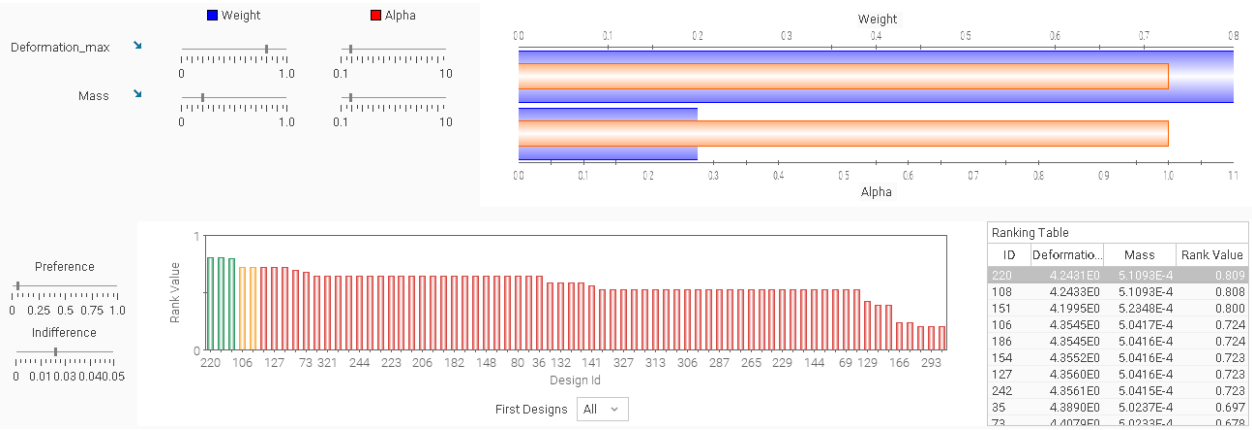

Figure 12: Multi-criteria decisional method implemented in modeFRONTIER