POLITECNICO DI TORINO
Repository ISTITUZIONALE

Mechanics as a general-relativistic gauge field theory, and relational quantization

Original
Mechanics as a general-relativistic gauge field theory, and relational quantization / François, J.T., Ravera, L.. - ELETTRONICO. - 1:000126(2026), pp. 1-50. [10.1103/bttl-7rdd]

Availability:
This version is available at: 11583/3015700 since: 2026-09-18T16:32:41Z

Publisher:
American Physical Society - APS

Published
DOI:10.1103/bttl-7rdd

Terms of use:

This article is made available under terms and conditions as specified in the corresponding bibliographic description in the repository

Publisher copyright

(Article begins on next page)

17 October 2026

Mechanics as a general-relativistic gauge field theory, and relational quantization

J. T. François [1,2,*] and L. Ravera [3,4,5,†]

[1] *Department of Philosophy, University of Graz—Uni Graz, Heinrichstraße 26/5, 8010 Graz, Austria*
[2] *Department of Mathematics & Statistics, Masaryk University—MUNI, Kotlářská 267/2, Veveří, Brno, Czech Republic*
[3] *DISAT, Politecnico di Torino—PoliTo, Corso Duca degli Abruzzi 24, 10129 Torino, Italy*
[4] *Istituto Nazionale di Fisica Nucleare, Section of Torino—INFN, Via P. Giuria 1, 10125 Torino, Italy*
[5] *Grupo de Investigación en Física Teórica—GIFT, Universidad Católica De La Santísima Concepción, Concepción, Chile*

(Received 13 June 2026; accepted 19 August 2026; published 8 September 2026)

We treat the mechanics of point particles as a one-dimensional general-relativistic gauge field theory, which may be referred to as mechanical field theory (MFT), exploiting the bundle geometry of mechanical field space (MFS). The diffeomorphism covariance of MFT encodes its relational character, arising—as in all general-relativistic physics—via the conjunction of a hole and a point-coincidence argument. Any putative "boundary problem," meaning the claim that "spacetime" boundaries break diffeomorphism and gauge symmetries, thereby dissolves. It is highlighted that the standard path integral (PI) on the MFS, the exact analog of the PI used in gauge field theory, is conceptually and technically *distinct* from the standard PI of quantum mechanics. We then use the dressing field method to give a manifestly invariant and relational reformulation of MFT, which reproduces the standard textbook formulation when a clock field is chosen as a (natural) dressing field. The dressed, or basic, PI on the MFS, defining *relational quantization*—i.e., the quantization of invariant relational degree of freedom—is shown to reproduce the standard PI of quantum mechanics. This establishes the soundness of relational quantization as a general guiding principle: We outline it for general-relativistic gauge field theories.

DOI: 10.1103/bttl-7rdd

I. INTRODUCTION

The paradigmatic insight of general-relativistic (GR) gauge field theory (gRGFT), encoded in their local symmetries, is *relationality*: i.e., the fact that physical spatiotemporal and internal field-theoretical degrees of freedom (d.o.f.) dynamically codefine each other. As articulated in Ref. [1], this fact arises from combining the generalized hole argument and point-coincidence argument. The default formalism of gRGFT is therefore manifestly covariant under its local group of transformations, the semidirect product of diffeomorphisms and internal gauge groups $\mathrm{Diff}(M) \ltimes \mathcal{H}$, and tacitly relational. This makes for many apparent conceptual difficulties that may lead to *a priori* puzzling and interrelated questions: most notably the determination of the

*Contact author: jordan.francois@uni-graz.at
†Contact author: lucrezia.ravera@polito.it

Published by the American Physical Society under the terms of the Creative Commons Attribution 4.0 International license. Further distribution of this work must maintain attribution to the author(s) and the published article's title, journal citation, and DOI.

physical d.o.f. and observables, the "boundary problem" or problem of subsystems in gRGFT, and the "problem of time." A *relational* (re)formulation of gRGFT, i.e., a reformulation that is manifestly *invariant* under $\mathrm{Diff}(M) \ltimes \mathcal{H}$, might dissolve some of these difficulties. In Ref. [2], we developed in full detail such a relational formulation based on the dressing field method (DFM), a systematic approach to the reduction of local symmetries (see Refs. [3–6] for applications to supersymmetric field theory).

Our program aims at a relational, formally unified, and conceptually clear rewriting of fundamental physics. This must encompass quantum theory. In Ref. [2], we hinted that the next phase of this program was to systematically develop the DFM-based notion of relational quantization (RQ): i.e., the quantization of a dressed theory. It is in essence the claim that a sensible quantum theory is one arising from the quantization of physical, relational, d.o.f. Applied to fields, it would lead to relational quantum field theory (rQFT). If the core idea is not new, having a long branching history, one important chapter is the quantization of constrained systems, with roots in the work of Bergmann [7] and Dirac [8], another is the covariant phase space formalism, which in physics is often traced back to Refs. [9–12] (but see Ref. [13] for a more complete history). Our approach is closer in spirit to the latter insofar as it starts with the field space of a gRGFT. It is distinct in that it systematically leverages the *bundle geometry* of field space—the DFM being a systematic way to realize its *basic cohomology*. The goals of this paper are twofold: First, to establish a DFM-based relational quantization a fruitful working hypothesis, then to outline it for gRGFT.

The first goal is aimed at by considering classical mechanics of point particles as a formal and conceptual laboratory. Mechanics is often seen as a mere stepping stone toward the more "sophisticated" topic of field theory (FT), especially gRGFT. Its well-established standard formulations, Lagrangian and Hamiltonian/symplectic, did provide inspiration for analog treatments of FT. The local symmetries of gRGFT introduce further conceptual and technical difficulties, necessitating (apparently) modifications or refinements of the formalisms: gauge fixings (GF), constraints, etc. It would thus seem that mechanics provides little insight into such more advanced subjects.

Likewise, standard quantum mechanics (QM) is certainly a stepping stone toward quantum field theory (QFT), its standard formulations providing motivations for analog quantization schemes of FT—notably, the Hamiltonian/canonical approach and the Dirac-Feynman path integral (PI), less often the Schrödinger approach. Here again, the local symmetries of gRGFT introduced difficulties that call for new notions and special tools: GF, ghosts, Becchi-Rouet-Stora-Tyutin (BRST) cohomology, anomaly cancellations, etc. [14]. So, aside from its singular interpretational challenges and the occasionally made observation that QM is a one-dimensional (1D) QFT [15], it would appear that QM sheds little light onto the technical and conceptual structure needed for the quantization of gRGFT.

A few authors have argued that even simple nonrelativistic (NR) classical mechanics of point particles, revisited, still has something to teach us; this is notably the case via so-called "parametrized" formulations [16–18], sometimes couched into the language of "partial vs complete observables" (cf., e.g., Refs. [19–23]). We happened to find ourselves directionally in agreement, and we shall here argue the case in the terms of the project mentioned above. First, in Secs. II and III we will provide a detailed treatment of mechanics as a 1D gRGFT; for ease of reference, we shall call this formulation "mechanical field theory" (MFT). For this, we will rely on the framework of Ref. [2]; calling mechanical field space (MFS) the space of parametrized mechanical coordinates ("mechanical fields"), we systematically exploit its bundle geometry, in particular, to handle adequately its automorphism groups and to introduce the notion of "associated bundle of regions." This generalizes the "parametrized" approaches mentioned above, giving a complete mathematical treatment paralleling exactly that of gRGFT. We shall stress that, as part of the gRGFT framework, the relationality of mechanics arises in exactly the same way it does in general-relativistic physics. Analogs of the problem of time and of the boundary problem arise in MFT, but are shown to dissolve when its relational structure is understood—as they ought to do in gRGFT. We will spell out the links to the standard approach to mechanics, also known as (a.k.a.) the "unparametrized" approach, showing it to relate to the invariant relational d.o.f. encoded in the moduli base space $\mathcal{M}$ of the MFS

TABLE I. List of abbreviations.

	Acronym
Degrees of freedom	d.o.f.
Dressing field method	DFM
Field theory	FT
Gauge field theory	GFT
Gauge fixing	GF
General-relativistic gauge field theory	gRGFT
General relativity	GR
Mechanical field space	MFS
Mechanical field theory	MFT
Nonrelativistic	NR
Path integral	PI
Quantum field theory	QFT
Quantum mechanics	QM
Quantum gravity	QG
Relational quantization	RQ
Relational quantum field theory	rQFT
Relational quantum gravity	RQG

bundle. Insights drawn may export to gRGFT. Considering next the issue of quantization of MFT, we write the PI on MFS in exact analogy with the standard PI for GFT, stressing that it *is not* the standard PI approach to QM. The latter is instead the functional integral on $\mathcal{M}$, a first hint at RQ.

This general framework lays the ground to describe, in Sec. IV, how the DFM allows to realize the basic cohomology of MFS, and how it therefore relates to the physical relational d.o.f. of MFT. We then apply the DFM to give an explicit invariant relational reformulation of MFT: It is shown to reproduce exactly the standard, unparametrized, formulation of mechanics when the dressing field is the clock field—which echoes and recovers the partial/complete observables notions alluded to above. This also shows in a technically clear way how apparent conceptual issues raised by the local symmetries of MFT (e.g., the boundary problem) are dissolved by a relational, dressed, reformulation. We also highlight how the DFM accounts for possible change of dressing field, i.e., of clock in MFT: This naturally leads to a relational definition of a network of "good clocks," consistent with metrological practice. To then showcase RQ, we write the dressed PI on MFS, which is basic (invariant), showing it to reproduce (to be) the textbook standard PI formulation of QM. In other words, we indicate that QM is a 1D rQFT, giving a proof of concept that RQ, i.e., the quantization of the relational invariant d.o.f., is a natural viable scheme. In Sec. IV C 3, we outline the basics of RQ for gRGFT. We show, in particular, how the relational formulation automatically implements anomalies cancellation mechanism, encompassing Wess-Zumino counterterms as a special case.

Section V contains closing remarks and hints at forthcoming and future developments, notably regarding models of relational quantum gravity (RQG). For completeness, Appendix A also presents the covariant phase-space formulation of MFT and its relation to the standard symplectic treatment of (nonrelativistic) mechanics, thereby making explicit the connection of the present framework with covariant phase-space methods, gauge reduction, and edge-mode constructions commonly employed in gauge theories and generally covariant systems.

For the reader's convenience, we summarize the abbreviations used throughout the paper in Table I. The principal mathematical notations we adopt are collected in Table III.

II. GEOMETRY OF MECHANICAL FIELD SPACE Φ: KINEMATICS

We specialize the formalism detailed in Ref. [2] (see also Ref. [24]), developing the view of mechanics as a model of the general-relativistic framework, thus generalizing the so-called

"parametric approach" as discussed, e.g., in Refs. [18,25], which emphasizes conceptual aspects, and in the nice classic by Lanczos [16], which offers a more systematic technical presentation. To highlight the key conceptual structures, we focus here on mechanics of structureless point particles, i.e., no rotation and no spin, but the generalization to particles with spin and to extended bodies with d.o.f. poses no special challenges.

We shall consider the mechanics of N structureless point particles. It is the theory of fields on a one-dimensional manifold I, $\phi = (x, t) : I \to \mathsf{T}$, $\tau \mapsto \phi(\tau) = (x(\tau), t(\tau))$, where T is a target space representing spatiotemporal d.o.f., and the *clock field* t is s.t. $\dot{t} = \frac{dt}{d\tau} > 0$. The fields $\phi = (x, t)$ represent a "parametrization" of a kinematical history of the set of N particles. In standard NR mechanics, for $N = 1$, we have $\mathsf{T} = \mathbb{E}^3 \times \mathcal{T}$, where $\mathbb{E}^3$ is the affine Euclidean space and $\mathcal{T}$ is the affine "clock" timeline; for $N > 1$, typically but not necessarily, one uses a single clock field t for all N *spatial fields* $x = x_N$, so $\mathsf{T} = \mathbb{R}^{3N} \times \mathcal{T}^{(N)}$ and $(x, t) = (x_1, \ldots, x_N; t_{(N)})$. This naturally generalizes to $\mathsf{T} = M^{3N} \times \mathcal{T}^{(N)}$, where M^3 is a 3-manifold; that is, the description of classical particles in curved 3-space (which accommodates, e.g., Newton-Cartan theory). The framework to be presented may generalize to special relativistic mechanics, but we shall limit ourselves here to nonrelativistic mechanics for simplicity.

From the viewpoint of the manifold I, the target space T of the fields $\phi = (x, t)$ is "internal," so that a natural transformation group H of T plays the role of rigid "internal group," while maps $\xi : I \to H$ form a "gauge group" $\mathcal{H}$ acting on fields as $\phi \mapsto \phi^\xi = (x^\xi, t^\xi)$ [26]. For nonrelativistic mechanics, one may, e.g., consider the group of spatial translations $H = \mathbb{R}^{3N}$, so $(x^\xi, t^\xi) = (x + \xi, t)$ (see, e.g., Ref. [27]). The fields ϕ are thus *gauge fields* on I. In addition, they naturally support the action of $\mathrm{Diff}(I)$, and so do elements of $\mathcal{H}$, so that the full group of transformations acting on ϕ is $\mathrm{Diff}(I) \ltimes \mathcal{H}$, as befitting a general-relativistic gauge field theory as described in Ref. [2]. The difference with mechanics is that not all $\mathcal{H}$ induces unphysical transformations. For this reason, but more importantly to focus on key conceptual aspects, in the following we restrict our attention to the sole action of $\mathrm{Diff}(I)$, thus considering mechanics as a case of "general-relativistic" field theory: We may call it MFT.

A. The mechanical field space and its natural transformation groups

The field space of MFT, we call it the MFS Φ, supports a natural right action by $\mathrm{Diff}(I)$:

$$\begin{aligned} &\Phi \times \mathrm{Diff}(I) \to \Phi, \\ &(\phi, \psi) \mapsto R_\psi\, \phi := \psi^* \phi =: \phi^\psi, \\ &((x, t), \psi) \mapsto R_\psi\, (x, t) := (\psi^* x, \psi^* t) =: (x^\psi, t^\psi). \end{aligned} \tag{1}$$

Indeed, it satisfies $R_{\psi'} R_\psi \phi := \psi'^* \psi^* \phi = (\psi \circ \psi')^* \phi =: R_{\psi \circ \psi'} \phi$. The MFS is fibered by this action, the fiber through a point ϕ being its $\mathrm{Diff}(I)$-orbit $\mathcal{O}(\phi)$. The set of orbits, or *moduli space* of fields, we denote by $\mathcal{M} := \Phi/\mathrm{Diff}(I)$. The latter is closely related to the so-called extended configuration (phase) space [19,25,28] (see the end of Sec. III C). So, the MFS is an infinite-dimensional principal bundle with structure group $\mathrm{Diff}(I)$,

$$\Phi \xrightarrow{\pi} \mathcal{M}, \quad \phi = (x, t) \mapsto \pi(\phi) = \pi(x, t) =: [\phi] = [x, t]. \tag{2}$$

The projection π is s.t. $\pi \circ R_\psi = \pi$. The fiber over a point $[\phi] \in \mathcal{M}$, $\pi^{-1}([\phi]) = \mathcal{O}(\phi)$, is diffeomorphic to the structure group $\mathrm{Diff}(I)$ as a manifold. A local section of the MFS over a subset $\mathcal{U} \subset \mathcal{M}$ is a smooth map $\sigma : \mathcal{U} \to \Phi_{|\mathcal{U}}$, $[\phi] \mapsto \sigma([\phi]) := \phi^\sigma = (x^\sigma, t^\sigma)$, s.t. $\pi \circ \sigma = \mathrm{id}_{\mathcal{U}}$. Within the region $\Phi_{|\mathcal{U}}$ over $\mathcal{U}$, the image of the local section $\mathrm{Im}(\sigma)$ intersects fibers once, thus selecting a single representative ϕ^σ in each $\mathrm{Diff}(I)$-orbit $\mathcal{O}(\phi)$: i.e., a choice of local section σ is a *gauge fixing*. Distinct local sections are related by $\sigma' = R_\psi \circ \sigma = \psi^* \sigma$, where $\psi : \mathcal{U} \to \mathrm{Diff}(I)$, $[\phi] \mapsto \psi([\phi])$, is a transition function of Φ; meaning that gauge fixing is not a $\mathrm{Diff}(I)$-invariant operation.

As a manifold, Φ has a diffeomorphisms group $\mathbf{Diff}(\Phi)$, but *as a principal bundle* its maximal transformation group is its group of *automorphisms*

$$\mathbf{Aut}(\Phi) := \{\Xi \in \mathbf{Diff}(\Phi) \mid \Xi \circ R_\psi = R_\psi \circ \Xi\}, \tag{3}$$

whose elements preserve the fibration structure and thus naturally induce diffeomorphisms of the base, $\mathbf{Diff}(\mathcal{M})$. It contains a normal subgroup, the group of *vertical automorphisms*

$$\mathbf{Aut}_v(\Phi) := \{\Xi \in \mathbf{Aut}(\Phi) \mid \pi \circ \Xi = \pi\}, \tag{4}$$

which is isomorphic to the *gauge group* of Φ:

$$\mathbf{Diff}(I) := \{\boldsymbol{\psi} : \Phi \to \mathrm{Diff}(I) \mid \boldsymbol{\psi}(\phi^\psi) = \psi^{-1} \circ \boldsymbol{\psi}(\phi) \circ \psi\}. \tag{5}$$

The isomorphism being given by $\Xi(\phi) = R_{\boldsymbol{\psi}(\phi)}\phi$ still, i.e., $\boldsymbol{\psi} \in \mathbf{Diff}(I)$ induces $\Xi \in \mathbf{Aut}_v(\Phi)$. The equivariance of elements $\boldsymbol{\psi}$ of $\mathbf{Diff}(I)$ implies that $\Xi' \circ \Xi \in \mathbf{Aut}_v(\Phi)$ is induced by $\boldsymbol{\psi}' \circ \boldsymbol{\psi} \in \mathbf{Diff}(I)$: i.e., the composition operation $\circ$ in $\mathbf{Aut}_v(\Phi)$ translates to the composition operation $\circ$ of $\mathrm{Diff}(I)$. Since $\mathbf{Aut}_v(\Phi)$ is a normal subgroup of $\mathbf{Aut}(\Phi)$, we have the short exact sequence (SES)

$$\mathrm{id}_\Phi \to \mathbf{Diff}(I) \simeq \mathbf{Aut}_v(\Phi) \overset{\triangleleft}{\to} \mathbf{Aut}(\Phi) \longrightarrow \mathbf{Diff}(\mathcal{M}) \to \mathrm{id}_\mathcal{M}. \tag{6}$$

The group $\mathbf{Aut}_v(\Phi) \simeq \mathbf{Diff}(I)$ embodies what may be called "*field-dependent*" gauge transformations, in this case field-dependent diffeomorphisms of I [29]. The structure group $\mathrm{Diff}(I)$ then supplies the notion of "*field-independent*" gauge transformations, i.e., field-independent diffeomorphisms of I. The linear version of Eq. (6) gives a SES of Lie algebras defining the Atiyah Lie algebroid of the MFS Φ.

B. Differential structures

As a manifold, Φ has a tangent bundle $T\Phi$, a cotangent bundle $T^\star\Phi$, and more generally a space of forms $\Omega^\bullet(\Phi)$. In considering these structures, it is important to distinguish the pushforward and pullback on I and Φ: We use $*$ to denote these operations on I [as we did in Eq. (1)], and $\star$ for their counterparts on Φ.

Tangent bundle and subbundles. Vector fields $\mathfrak{X} : \Phi \to T\Phi$ are sections of the tangent bundle, $\mathfrak{X} \in \Gamma(T\Phi)$, and a Lie algebra under the bracket $[\ ,\ ]_{\Gamma(T\Phi)} : \Gamma(T\Phi) \times \Gamma(T\Phi) \to \Gamma(T\Phi)$. We write a vector field at $\phi \in \Phi$ as $\mathfrak{X}_{|\phi} = \frac{d}{ds}\Psi_s(\phi)\,|_{s=0}$, with flow $\Psi_s \in \mathbf{Diff}(\Phi)$ s.t. $\Psi_{s=0}(\phi) = \phi$. As derivations of the algebra of functions $C^\infty(\Phi)$, we may write $\mathfrak{X} = \mathfrak{X}(\phi)\frac{\delta}{\delta\phi}$, where $\frac{\delta}{\delta\phi}$ is the functional differentiation with respect to ϕ and $\mathfrak{X}(\phi)$ are the functional components.

The pushforward by the projection is $\pi_\star : T_\phi\Phi \to T_{\pi(\phi)}\mathcal{M} = T_{[\phi]}\mathcal{M}$. The pushforward by the right action of $\psi \in \mathrm{Diff}(I)$ is $R_{\psi\star} : T_\phi\Phi \to T_{\psi^*\phi}\Phi$. In general, $R_{\psi\star}\mathfrak{X}_{|\phi} \neq \mathfrak{X}_{|\psi^*\phi}$, i.e., a generic vector field "rotates" as it is pushed vertically along fibers, so that $\pi_\star\mathfrak{X}$ is not a well-defined vector field on the moduli space $\mathcal{M}$. This is not so for the Lie subalgebra of *right-invariant* vector fields

$$\Gamma_{\mathrm{inv}}(T\Phi) := \{\mathfrak{X} \in \Gamma(T\Phi) \mid R_{\psi\star}\mathfrak{X}_{|\phi} = \mathfrak{X}_{|\psi^*\phi}\}, \tag{7}$$

which have well-defined projections on $\mathcal{M}$ as they do not rotate as they are pushed vertically. Indeed, for $\mathfrak{X} \in \Gamma_{\mathrm{inv}}(T\Phi)$, we have $\pi_\star\mathfrak{X}_{|\psi^*\phi} = \pi_\star R_{\psi\star}\mathfrak{X}_{|\phi} = (\pi \circ R_\psi)_\star\mathfrak{X}_{|\phi} = \pi_\star\mathfrak{X}_{|\phi} =: \mathfrak{Y}_{||[\phi]} \in T_{[\phi]}\mathcal{M}$. Then, $\pi_\star\mathfrak{X} =: \mathfrak{Y} \in \Gamma(T\mathcal{M})$. The property of invariant vector fields implies that their flows are automorphisms of Φ; the Lie subalgebra $\Gamma_{\mathrm{inv}}(T\Phi)$ is thus the Lie algebra of $\mathbf{Aut}(\Phi)$:

$$\mathfrak{aut}(\Phi) = (\Gamma_{\mathrm{inv}}(T\Phi);\ [\mathfrak{X}, \mathfrak{X}']_{\mathrm{aut}} := -[\mathfrak{X}, \mathfrak{X}']_{\Gamma(T\Phi)}). \tag{8}$$

The *vertical tangent bundle* $V\Phi := \ker \pi_\star$ is a canonical subbundle of the tangent bundle $T\Phi$. Vertical vector fields are elements of $\Gamma(V\Phi) := \{\mathfrak{X} \in \Gamma(T\Phi) \mid \pi_\star\mathfrak{X} = 0\}$. Since $V\Phi$ is a subbundle, $\Gamma(V\Phi)$ is a Lie ideal of $\Gamma(T\Phi)$. *Fundamental* vertical vector fields are generated by the action of the Lie algebra $\mathfrak{diff}(I)$ of the structure group:

$$\mathfrak{diff}(I) = (\Gamma(TI);\ [X, Y]_{\mathfrak{diff}(I)} := -[X, Y]_{\Gamma(\mathrm{TI})}). \tag{9}$$

For $X = \frac{d}{ds}\psi_s|_{s=0} \in \mathfrak{diff}(I)$ with flow $\psi_s \in \mathrm{Diff}(I)$, the corresponding fundamental vector at $\phi \in \Phi$ is

$$X^v_{|\phi} := \frac{d}{ds} R_{\psi_s}\,\phi\,\big|_{s=0} = \frac{d}{ds}\,\psi_s^*\,\phi\,\big|_{s=0} =: \mathfrak{L}_X\phi = (\mathfrak{L}_X x, \mathfrak{L}_X t). \tag{10}$$

The Lie derivative on I is as usual also given by the Cartan formula $\mathfrak{L}_X = [\iota_x, d] = \iota_X d + d\iota_X$, with $d = d\tau\frac{\partial}{\partial\tau}$ the de Rham exterior derivative on I. It is a degree 0 derivation of the algebra $\Omega^\bullet(I)$ of forms on I, since ι_X is of degree -1 and d is of degree 1. Also, since I is one dimensional, $\Omega^\bullet(I) = \Omega^0(I) \oplus \Omega^1(I)$. As $\phi \in \Omega^0(I)$ and $X = X(\tau)\frac{\partial}{\partial\tau}$, we have $X^v_{|\phi} = \iota_X d\phi = X[\phi] = X(\tau)\dot\phi$, i.e., $X^v_{|\phi} = (\iota_X dx, \iota_X dt) = (X[x], X[t]) = (X(\tau)\dot x, X(\tau)\dot t\,)$.

Manifestly, fundamental vector fields satisfy $\pi_\star X^v \equiv 0$, since $\pi_\star X^v_{|\phi} = \frac{d}{ds}\pi\circ R_{\psi_s}\phi\,|_{s=0} = \frac{d}{ds}\pi(\phi)\,|_{s=0}$. One shows that the map $|^v : \mathfrak{diff}(I) \to \Gamma(V\Phi)$, $X \mapsto X^v$, is a Lie algebra morphism: i.e., $([X,Y]_{\mathfrak{diff}(I)})^v = (-[X,Y]_{\Gamma(\mathrm{TP})})^v = [X^v, Y^v]$. The pushforward by the right action of $\mathrm{Diff}(I)$ of a fundamental vertical vector field is

$$\begin{aligned} R_{\psi\star}X^v_{|\phi} &:= \frac{d}{ds}R_\psi\circ R_{\psi_s}\phi\,\bigg|_{s=0} = \frac{d}{ds}R_{\psi_s\circ\psi}\phi\,\bigg|_{s=0} = \frac{d}{ds}R_{\psi_s\circ\psi}\,R_{\psi^{-1}\circ\psi}\,\phi\,\bigg|_{s=0} \\ &= \frac{d}{ds}R_{(\psi^{-1}\circ\psi_s\circ\psi)}\,R_\psi\,\phi\,\bigg|_{s=0} = \frac{d}{ds}R_{(\psi^{-1}\circ\psi_s\circ\psi)}\,\psi^*\phi\,\bigg|_{s=0} \\ &=: ((\psi^{-1})_*\,X\circ\psi)^v_{|\psi^*\phi}. \end{aligned} \tag{11}$$

Therefore, fundamental vector fields generated by $\mathfrak{diff}(I)$ are not right invariant.

On the other hand, the vertical vector fields induced by $\boldsymbol{\mathfrak{diff}}(I)$, the Lie algebra of the gauge group $\mathbf{Diff}(I)$, are right invariant. To $\boldsymbol{\psi}_s \in \mathbf{Diff}(I)$ corresponds $\boldsymbol{X} = \frac{d}{ds}\,\boldsymbol{\psi}_s\,|_{s=0} \in \boldsymbol{\mathfrak{diff}}(I)$. By the definition (5) of the gauge group, whose elements transform as $R^\star_\psi\boldsymbol{\psi} = \psi^{-1}\circ\boldsymbol{\psi}\circ\psi$, we have

$$\boldsymbol{\mathfrak{diff}}(I) := \{\boldsymbol{X} : \Phi \to \mathfrak{diff}(I) \mid R^\star_\psi\boldsymbol{X} = (\psi^{-1})_*\,\boldsymbol{X}\circ\psi\,\}. \tag{12}$$

This transformation property, which is also written as $\boldsymbol{X}(\phi^\psi) = \boldsymbol{X}(\psi^*\phi) = (\psi^{-1})_*\,\boldsymbol{X}(\phi)\circ\psi$, has infinitesimal version given by the Lie derivative on Φ along the fundamental vector field corresponding to ψ:

$$\boldsymbol{L}_{X^v}\boldsymbol{X} = X^v(\boldsymbol{X}) = \frac{d}{ds}R^\star_{\psi_s}\boldsymbol{X}\,\bigg|_{s=0} = \frac{d}{ds}\left(\psi_s^{-1}\right)_*\boldsymbol{X}\circ\psi_s\,\bigg|_{s=0} =: \mathfrak{L}_X\boldsymbol{X} = [X,\boldsymbol{X}]_{\Gamma(\mathrm{TI})} = [\boldsymbol{X}, X]_{\mathrm{diff}(I)}. \tag{13}$$

A fundamental vector field generated by $\boldsymbol{X} \in \boldsymbol{\mathfrak{diff}}(I)$ is

$$\boldsymbol{X}^v_{|\phi} := \frac{d}{ds}R_{\boldsymbol{\psi}_s(\phi)}\phi\,\bigg|_{s=0} = \frac{d}{ds}(\boldsymbol{\psi}_s(\phi))^*\phi\,\bigg|_{s=0} =: \mathfrak{L}_{\boldsymbol{X}}\phi. \tag{14}$$

Its pushforward by the right action of $\mathrm{Diff}(I)$ is

$$R_{\psi\star}\boldsymbol{X}^v_{|\phi} := \frac{d}{ds}R_\psi\circ R_{\boldsymbol{\psi}_s(\phi)}\phi\,\bigg|_{s=0} = \frac{d}{ds}R_{(\psi^{-1}\circ\boldsymbol{\psi}_s(\phi)\circ\psi)}\,R_\psi\,\phi\,\bigg|_{s=0} = \frac{d}{ds}R_{\boldsymbol{\psi}_s(\psi^*\phi)}\,\psi^*\phi\,\bigg|_{s=0} =: \boldsymbol{X}^v_{|\psi^*\phi}. \tag{15}$$

Furthermore, one shows that the "verticality map" $|^v : \boldsymbol{\mathfrak{diff}}(I) \to \Gamma_{\mathrm{inv}}(V\Phi)$, $\boldsymbol{X} \mapsto \boldsymbol{X}^v$, is a Lie algebra antimorphism: i.e., $([\boldsymbol{X},\boldsymbol{Y}]_{\mathfrak{diff}(I)})^v = (-[\boldsymbol{X},\boldsymbol{Y}]_{\Gamma(\mathrm{TP})})^v = -[\boldsymbol{X}^v, \boldsymbol{Y}^v]$. Therefore, since the Lie subalgebra of right-invariant vertical vector fields is the Lie algebra of the group $\mathbf{Aut}_v(\Phi)$, we have

$$\boldsymbol{\mathfrak{diff}}(I) \simeq \boldsymbol{\mathfrak{aut}}_v(\Phi) = (\Gamma_{\mathrm{inv}}(V\Phi); -[\ ,\ ]_{\Gamma(T\Phi)}). \tag{16}$$

From the above, we obtain the infinitesimal version of Eq. (6), which is the SES describing the Atiyah Lie algebroid of Φ,

$$0 \to \mathfrak{diff}(I) \simeq \mathfrak{aut}_v(\Phi) \xrightarrow{|^v} \mathfrak{aut}(\Phi) \xrightarrow{\pi_\star} \mathfrak{diff}(\mathcal{M}) \to 0. \tag{17}$$

A splitting of this SES, i.e., a map $\mathfrak{aut}(\Phi) \to \mathfrak{diff}(I)$, or equivalently, a map $\mathfrak{diff}(\mathcal{M}) \to \mathfrak{aut}(\Phi)$, allows to decompose a (right-invariant) vector field on Φ as a sum of a gauge element and a vector field on $\mathcal{M}$. Such a splitting is supplied by a choice of Ehresmann connection 1-form on Φ, the definition of which we remind in Sec. II C.

Finally, we state a key result for the geometric definition of gauge transformations on Φ. The pushforward by a vertical automorphism $\Xi \in \mathbf{Aut}_v(\Phi)$, induced by an element of the gauge group $\boldsymbol{\psi} \in \mathbf{Diff}(I)$, is the map $\Xi_\star : T_\phi\Phi \to T_{\Xi(\phi)}\Phi = T_{\boldsymbol{\psi}^*\phi}\Phi$. For a generic vector field $\mathfrak{X} \in \Gamma(T\Phi)$, it is

$$\begin{aligned}\Xi_\star\mathfrak{X}_{|\phi} &= R_{\boldsymbol{\psi}(\phi)\star}\mathfrak{X}_{|\phi} + \{\boldsymbol{\psi}(\phi)_*^{-1}\boldsymbol{d}\boldsymbol{\psi}_{|\phi}(\mathfrak{X}_{|\phi})\}^v_{|\,\Xi(\phi)} \\ &= R_{\boldsymbol{\psi}(\phi)\star}\big(\mathfrak{X}_{|\phi} + \{\boldsymbol{d}\boldsymbol{\psi}_{|\phi}(\mathfrak{X}_{|\phi}) \circ \boldsymbol{\psi}(\phi)^{-1}\}^v_{|\phi}\big).\end{aligned} \tag{18}$$

This relation can be used to obtain the result for repeated pushforward, i.e., iterated gauge transformations: e.g., to get the result for $(\Xi' \circ \Xi)_\star\mathfrak{X}_{|\phi}$, one only needs to substitute $\boldsymbol{\psi} \to \boldsymbol{\psi}' \circ \boldsymbol{\psi}$ above.

Differential forms. The de Rham complex of Φ is $(\Omega^\bullet(\Phi); \boldsymbol{d})$ with $\boldsymbol{d}$ the de Rham (exterior) derivative on field space, which is s.t. $\boldsymbol{d}^2 = 0$ and defined via the Koszul formula. The exterior product $\wedge$ is defined on scalar-valued forms as usual, so that $(\Omega^\bullet(\Phi, \mathbb{K}), \wedge, \boldsymbol{d})$ is a differential graded algebra. The exterior product is also defined on the space $\Omega^\bullet(\Phi, \mathsf{A})$ of forms with values in an algebra $(\mathsf{A}, \cdot)$, using the product in A instead of the product in $\mathbb{K}$. So, $(\Omega^\bullet(\Phi, \mathsf{A}), \wedge, \boldsymbol{d})$ is again a differential graded algebra [30]. The case of immediate interest to us is $\mathsf{A} = (\Omega^\bullet(I), \wedge)$ the algebra of forms on I. We write a form $\boldsymbol{\alpha} \in \Omega^\bullet(\Phi)$ evaluated at $\phi \in \Phi$ as

$$\boldsymbol{\alpha}_{|\phi} = \alpha(\wedge^\bullet \boldsymbol{d}\phi_{|\phi}; \phi), \tag{19}$$

where $\boldsymbol{d}\phi = (\boldsymbol{d}x, \boldsymbol{d}t) \in \Omega^1(\Phi)$ is the basis 1-form on Φ and $\alpha(\ ;\ )$ is the functional expression of $\boldsymbol{\alpha}$, alternating multilinear in the first arguments and with arbitrary ϕ dependence in the second argument. For example, given a 0-form $\boldsymbol{f}$ we have $\boldsymbol{d}f = d\phi\frac{\delta}{\delta\phi}\boldsymbol{f} = \boldsymbol{d}x\frac{\delta}{\delta x}\boldsymbol{f} + \boldsymbol{d}t\frac{\delta}{\delta t}\boldsymbol{f}$.

The action by pullback of $\mathrm{Diff}(I)$ on a form $\boldsymbol{\alpha} \in \Omega^\bullet(\Phi)$ defines its *equivariance*, $R^\star_\psi\alpha$. The action by pullback of $\mathbf{Aut}_v(\Phi) \simeq \mathbf{Diff}(I)$ defines *gauge transformations*, which we write $\boldsymbol{\alpha}^{\boldsymbol{\psi}} := \Xi^\star\boldsymbol{\alpha}$. We have

$$\begin{aligned}R^\star_\psi\boldsymbol{\alpha}_{|\phi^\psi} &= \alpha(\wedge^\bullet R^\star_\psi\boldsymbol{d}\phi_{|\phi^\psi}; R_\psi\phi) = \alpha(\wedge^\bullet R^\star_\psi\boldsymbol{d}\phi_{|\phi^\psi}; \phi^\psi), \quad \text{for } \psi \in \mathrm{Diff}(I), \\ \boldsymbol{\alpha}^{\boldsymbol{\psi}}_{|\phi} &:= \Xi^\star\boldsymbol{\alpha}_{|\Xi(\phi)} = \alpha(\wedge^\bullet\Xi^\star\boldsymbol{d}\phi_{|\Xi(\phi)};\ \Xi(\phi)) = \alpha(\wedge^\bullet\Xi^\star\boldsymbol{d}\phi_{|\phi^{\boldsymbol{\psi}}}; \phi^{\boldsymbol{\psi}}), \quad \text{for } \Xi \in \mathbf{Aut}_v(\Phi) \sim \boldsymbol{\psi} \in \mathbf{Diff}(I).\end{aligned} \tag{20}$$

The infinitesimal equivariance and vertical transformations of $\boldsymbol{\alpha}$ are given by its Lie derivative along the elements of $\Gamma(V\Phi)$ generated respectively by $\mathfrak{diff}(I)$ and $\mathfrak{diff}(I)$ [31]:

$$\boldsymbol{L}_{X^v}\boldsymbol{\alpha} = \frac{d}{ds}R^\star_{\psi_s}\boldsymbol{\alpha}\bigg|_{s=0}, \quad \text{with } X \in \mathfrak{diff}(I), \qquad \boldsymbol{L}_{\boldsymbol{X}^v}\boldsymbol{\alpha} = \frac{d}{ds}\Xi^\star_s\boldsymbol{\alpha}\bigg|_{s=0}, \quad \text{with } \boldsymbol{X} \in \mathfrak{diff}(I). \tag{21}$$

Notably for our purpose, the equivariance of a $\Omega^\bullet(I)$-valued form $\boldsymbol{\alpha}$ is $R^\star_\psi\boldsymbol{\alpha} = \psi^*\boldsymbol{\alpha}$, and infinitesimally $L_{X^v}\boldsymbol{\alpha} = \mathfrak{L}_X\boldsymbol{\alpha}$. There are forms of particular interest whose gauge transformations are read directly from their defining properties.

First, *equivariant* forms are those whose equivariance assumes a simple form. *Standard equivariant* forms are valued in representations $(\rho, \boldsymbol{V})$ of the structure group $\mathrm{Diff}(I)$ and s.t.

$$\Omega^\bullet_{\mathrm{eq}}(\Phi, \rho) := \{\boldsymbol{\alpha} \in \Omega^\bullet(\Phi, \boldsymbol{V}) \,|\, R^\star_\psi\boldsymbol{\alpha}_{|\phi^\psi} = \rho(\psi)^{-1}\boldsymbol{\alpha}_{|\phi}\}. \tag{22}$$

Their infinitesimal equivariance property is $\boldsymbol{L}_{X^v}\boldsymbol{\alpha} = -\rho_*(X)\boldsymbol{\alpha}$ for $X \in \mathfrak{diff}(I)$. *Cocyclic equivariant* forms [2,32] have equivariance controlled by a 1-cocycle for the action of $\mathrm{Diff}(I)$ on Φ, i.e., a map

$$\begin{aligned} &C : \Phi \times \mathrm{Diff}(I) \to G, \quad G \text{ some Lie group,} \\ &\qquad (\phi, \psi) \mapsto C(\phi; \psi), \quad \text{s.t. } C(\phi; \psi' \circ \psi) = C(\phi; \psi') \cdot C(\phi^{\psi'}; \psi). \end{aligned} \tag{23}$$

In case $G = U(1)$, we have $C(\phi; \psi) = \exp i\, c(\phi; \psi)$ and

$$\begin{aligned} &c : \Phi \times \mathrm{Diff}(I) \to \mathbb{R}, \\ &\qquad (\phi, \psi) \mapsto c(\phi; \psi), \quad \text{s.t. } c(\phi; \psi' \circ \psi) = c(\phi; \psi') + c(\phi^{\psi'}; \psi). \end{aligned} \tag{24}$$

Manifestly, ϕ-independent 1-cocycles are group morphisms, i.e., 1-cocycles are generalizations of representations. Given a G-space $\boldsymbol{V}$, one defines cocyclic equivariant forms as

$$\Omega^\bullet_{\mathrm{eq}}(\Phi, C) := \{\boldsymbol{\alpha} \in \Omega^\bullet(\Phi, \boldsymbol{V}) \,|\, R^\star_\psi \boldsymbol{\alpha}_{|\phi^\psi} = C(\phi; \psi)^{-1} \boldsymbol{\alpha}_{|\phi}\}. \tag{25}$$

The properties (23) and (24) ensure compatibility with the right action: $R^\star_{\psi'} R^\star_\psi = R^\star_{\psi' \circ \psi}$. The infinitesimal equivariance is $\boldsymbol{L}_{X^v}\boldsymbol{\alpha} = -a(X; \phi)\boldsymbol{\alpha}$, where $a(X, \phi) := \frac{d}{ds} C(\phi, \psi_s)|_{s=0}$ is a 1-cocycle for the action of $\mathfrak{diff}(I)$ on Φ:

$$\begin{aligned} &a : \Phi \times \mathfrak{diff}(I) \to \mathfrak{g}, \quad \mathfrak{g} \text{ the Lie algebra of } G, \\ &\qquad (\phi, X) \mapsto a(X; \phi), \quad \text{s.t. } X^v \cdot a(Y; \phi) - Y^v \cdot a(X; \phi) + [a(X; \phi),\ a(Y; \phi)]_{\mathfrak{g}} \\ &\qquad\qquad = a([X, Y]_{\mathfrak{diff}(I)}; \phi). \end{aligned} \tag{26}$$

The infinitesimal relation (26) ensures compatibility with the right action: $[\boldsymbol{L}_{X^v}, \boldsymbol{L}_{X^v}] = \boldsymbol{L}_{[X^v, Y^v]} = \boldsymbol{L}_{([X,Y]_{\mathfrak{diff}(I)})^v}$. Notice this is a non-Abelian generalization of the Wess-Zumino (WZ) consistency condition for anomalies $a(X; \phi)$. The WZ consistency condition being reproduced for Abelian G.

The subspace of *invariant* forms is those whose equivariance is trivial, and *horizontal* forms are those vanishing on vertical vector field:

$$\begin{aligned} &\Omega^\bullet_{\mathrm{inv}}(\Phi) = \{\boldsymbol{\alpha} \in \Omega^\bullet(\Phi) \,|\, R^\star_\psi \boldsymbol{\alpha} = \boldsymbol{\alpha}\}, \text{ infinitesimally } \boldsymbol{L}_{X^v}\boldsymbol{\alpha} = 0, \\ &\Omega^\bullet_{\mathrm{hor}}(\Phi) = \{\boldsymbol{\alpha} \in \Omega^\bullet(\Phi) \,|\, \iota_{X^v}\boldsymbol{\alpha} = 0\}. \end{aligned} \tag{27}$$

A form which is both equivariant and horizontal is *tensorial*. *Standard* tensorial forms are

$$\Omega^\bullet_{\mathrm{tens}}(\Phi, \rho) := \{\boldsymbol{\alpha} \in \Omega^\bullet(\Phi, \boldsymbol{V}) \,|\, R^\star_\psi \boldsymbol{\alpha} = \rho(\psi)^{-1}\boldsymbol{\alpha},\ \&\ \iota_{X^v}\boldsymbol{\alpha} = 0\}. \tag{28}$$

Similarly, *cocyclic tensorial* forms are

$$\Omega^\bullet_{\mathrm{tens}}(\Phi, C) := \{\boldsymbol{\alpha} \in \Omega^\bullet(\Phi, \boldsymbol{V}) \,|\, R^\star_\psi \boldsymbol{\alpha} = C(\phi; \psi)^{-1}\boldsymbol{\alpha},\ \&\ \iota_{X^v}\boldsymbol{\alpha} = 0\}. \tag{29}$$

In both standard and cocyclic cases, we have $\Omega^0_{\mathrm{tens}}(\Phi) = \Omega^0_{\mathrm{eq}}(\Phi)$. It is well known that the de Rham derivative $\boldsymbol{d}$ does not preserve $\Omega^\bullet_{\mathrm{tens}}(\Phi)$—horizontality being lost—which is why *connections* on Φ are needed to define *covariant derivatives* on the spaces of tensorial forms. We come to this in Sec. II C next.

Finally, forms that are both invariant and horizontal are called *basic*:

$$\Omega^\bullet_{\mathrm{basic}}(\Phi) := \{\boldsymbol{\alpha} \in \Omega^\bullet(\Phi) \,|\, R^\star_\psi \boldsymbol{\alpha} = \boldsymbol{\alpha}\ \&\ \iota_{X^v}\boldsymbol{\alpha} = 0\}. \tag{30}$$

This space is preserved by $\boldsymbol{d}$, so $(\Omega^\bullet_{\mathrm{basic}}(\Phi), \boldsymbol{d})$ is a subcomplex of the de Rham complex of Φ: the *basic subcomplex*. The cohomology of $(\Omega^\bullet_{\mathrm{basic}}(\Phi), \boldsymbol{d})$ defines the *equivariant cohomology* of Φ [33]. Since $[\boldsymbol{d}, \pi^\star] = 0$, it is isomorphic to the cohomology $(\Omega^\bullet(\mathcal{M}), \boldsymbol{d})$ of the base moduli space. Therefore, basic forms can also be defined as

$$\Omega^\bullet_{\mathrm{basic}}(\Phi) := \{\boldsymbol{\alpha} \in \Omega^\bullet(\Phi) \,|\, \exists\, \boldsymbol{\beta} \in \Omega^\bullet(\mathcal{M}), \quad \text{s.t. } \boldsymbol{\alpha} = \pi^\star \boldsymbol{\beta}\} = \mathrm{Im}(\pi^\star). \tag{31}$$

The basic cohomology is especially important when it is impractical (or impossible) to work concretely on $\mathcal{M}$, as is generically the case in gRGFT. Observe that the analog of $\Gamma_{\text{inv}}(T\Phi)$ for forms is not $\Omega^\bullet_{\text{inv}}(\Phi)$ but $\Omega^\bullet_{\text{basic}}(\Phi)$. Only basic forms induce forms in $\Omega^\bullet(\mathcal{M})$, thus contain only physical d.o.f. In Sec. IV A, we review a systematic method to build the basic version $\boldsymbol{\alpha}^{\mathbf{u}} \in \Omega^\bullet_{\text{basic}}(\Phi)$ of a form $\boldsymbol{\alpha} \in \Omega^\bullet(\Phi)$: the DFM.

Gauge transformations. As seen above, the gauge transformation of a form $\boldsymbol{\alpha} \in \Omega^\bullet(\Phi)$ is its pullback by $\mathbf{Aut}_v(\Phi)$ and expressible in terms of the elements of $\mathbf{Diff}(I)$, hence the notation $\boldsymbol{\alpha}^{\boldsymbol{\psi}} := \Xi^\star\boldsymbol{\alpha}$. Concrete expressions are obtained by using the pullback/pushforward duality, together with Eq. (18): For any $(\mathfrak{X}, \ldots) \in \Gamma(T\Phi)$, one has

$$\begin{aligned}\boldsymbol{\alpha}^{\boldsymbol{\psi}}_{|\phi}(\mathfrak{X}_{|\phi}, \ldots) &= \Xi^\star\boldsymbol{\alpha}_{|\Xi(\phi)}(\mathfrak{X}_{|\phi}, \ldots) = \boldsymbol{\alpha}_{|\Xi(\phi)}(\Xi_\star\mathfrak{X}_{|\phi}, \ldots)\\ &= \boldsymbol{\alpha}_{|\phi^{\boldsymbol{\psi}(\phi)}}\big(R_{\boldsymbol{\psi}(\phi)\star}\big(\mathfrak{X}_{|\phi} + \{\boldsymbol{d}\boldsymbol{\psi}_{|\phi}(\mathfrak{X}_{|\phi}) \circ \boldsymbol{\psi}(\phi)^{-1}\}^v_{|\phi}\big), \ldots\big)\\ &= R^\star_{\boldsymbol{\psi}(\phi)}\,\boldsymbol{\alpha}_{|\phi^{\boldsymbol{\psi}(\phi)}}\big(\mathfrak{X}_{|\phi} + \{\boldsymbol{d}\boldsymbol{\psi}_{|\phi}(\mathfrak{X}_{|\phi}) \circ \boldsymbol{\psi}(\phi)^{-1}\}^v_{|\phi}, \ldots\big).\end{aligned} \tag{32}$$

From this, it is manifest that the gauge transformation of a form is controlled by its equivariance and verticality properties. In particular, the vertical transformation of a tensorial form is controlled simply by its equivariance:

$$\text{For } \boldsymbol{\alpha} \in \Omega^\bullet_{\text{tens}}(\Phi, \rho), \quad \boldsymbol{\alpha}^{\boldsymbol{\psi}} = \rho(\boldsymbol{\psi})^{-1}\boldsymbol{\alpha}, \quad \text{for } \boldsymbol{\alpha} \in \Omega^\bullet_{\text{tens}}(\Phi, C), \quad \boldsymbol{\alpha}^{\boldsymbol{\psi}} = C(\boldsymbol{\psi})^{-1}\boldsymbol{\alpha}, \tag{33}$$

where we introduce the simplified notation $[C(\boldsymbol{\psi})](\phi) := C(\phi; \boldsymbol{\psi}(\phi))$ for the 1-cocycle [34]. The infinitesimal gauge transformations, under $\mathfrak{aut}_v(\Phi) \simeq \mathfrak{diff}(I)$, are given by the linearization of Eq. (32),

$$\boldsymbol{L}_{\boldsymbol{X}^v}\boldsymbol{\alpha} = \frac{d}{ds} R^\star_{\boldsymbol{\psi}_s}\boldsymbol{\alpha}\bigg|_{s=0} + \iota_{\{\boldsymbol{dX}\}^v}\boldsymbol{\alpha}, \tag{34}$$

with $\boldsymbol{X} = \frac{d}{ds}\boldsymbol{\psi}_s|_{s=0}$ [35]. For example, for a $\Omega^\bullet(I)$-valued form $\boldsymbol{\alpha}$, this specializes to $\boldsymbol{L}_{\boldsymbol{X}^v}\boldsymbol{\alpha} = \mathfrak{L}_{\boldsymbol{X}}\boldsymbol{\alpha} + \iota_{\{\boldsymbol{dX}\}^v}\boldsymbol{\alpha}$ [36], while for tensorial forms it gives the infinitesimal versions of Eq. (33),

$$\boldsymbol{L}_{\boldsymbol{X}^v}\boldsymbol{\alpha} = -\rho_*(\boldsymbol{X})\boldsymbol{\alpha}, \quad \boldsymbol{L}_{\boldsymbol{X}^v}\boldsymbol{\alpha} = -a(\boldsymbol{X})\boldsymbol{\alpha}, \tag{35}$$

where we introduce the notation $[a(\boldsymbol{X})](\phi) := a(\boldsymbol{X}(\phi); \phi)$ for the linearized 1-cocycle. Given their definition, basic forms are gauge invariant:

$$\text{For } \boldsymbol{\alpha} \in \Omega^\bullet_{\text{basic}}(\Phi), \quad \boldsymbol{\alpha}^{\boldsymbol{\psi}} = \boldsymbol{\alpha} \quad \text{so} \quad L_{\boldsymbol{X}^v}\boldsymbol{\alpha} = 0, \tag{36}$$

as expected for forms containing only physical, $\mathbf{Diff}(I)$-invariant, d.o.f. and inducing forms on the moduli space $\mathcal{M}$.

To illustrate, let us consider the example of the basis 1-form $\boldsymbol{d}\phi = (\boldsymbol{d}x, \boldsymbol{d}t) \in \Omega^1(\Phi)$, which is important since its gauge transformation $\boldsymbol{d}\phi^{\boldsymbol{\psi}} := \Xi^\star\boldsymbol{d}\phi$ features in the general formulas (20) for the gauge transformation of any form. The equivariance and verticality properties of $\boldsymbol{d}\phi$ are given by definition

$$R^\star_\psi\boldsymbol{d}\phi := \psi^*\boldsymbol{d}\phi \quad \text{and} \quad \boldsymbol{\iota}_{\boldsymbol{X}^v}\boldsymbol{d}\phi := \mathfrak{L}_{\boldsymbol{X}}\phi, \tag{37}$$

the verticality property reproducing the $\mathfrak{diff}(I)$ transformation of the field $\phi = (x, t)$. It is then immediate that

$$\boldsymbol{d}\phi^{\boldsymbol{\psi}} := \Xi^\star\boldsymbol{d}\phi = \boldsymbol{\psi}^*(\boldsymbol{d}\phi + \mathfrak{L}_{\boldsymbol{d}\boldsymbol{\psi}\circ\boldsymbol{\psi}^{-1}}\phi). \tag{38}$$

Similar results are arrived at in a heuristic way in the literature on covariant phase space of gRGFT (see, e.g., Ref. [37]). In Ref. [2], it is derived from geometric first principles as we did here. The linear version is $\boldsymbol{L}_{\boldsymbol{X}^v}\boldsymbol{d}\phi = \mathfrak{L}_{\boldsymbol{X}}\boldsymbol{d}\phi + \mathfrak{L}_{\boldsymbol{dX}}\phi$, as is clear also from Eq. (34).

C. Connections on mechanical field space

As reminded above, connections on the MFS Φ are necessary to define covariant derivatives on $\Omega^{\bullet}_{\text{tens}}(\Phi)$: For standard tensorial forms one needs an Ehresmann connection 1-form, while for cocyclic tensorial forms one needs a generalization called *cocyclic connection* 1-form [2,27,32]. We briefly review these two notions.

An Ehresmann connection $\boldsymbol{\omega} \in \Omega^1_{\text{eq}}(\Phi, \mathfrak{diff}(I))$ on the mechanical field space Φ is defined by two properties:

$$\begin{aligned} \boldsymbol{\omega}_{|\phi}\big(X^v_{|\phi}\big) &= X, \quad \text{for } X \in \mathfrak{diff}(I), \\ R^{\star}_{\psi}\boldsymbol{\omega}_{|\phi^{\psi}} &= \psi_*^{-1}\,\boldsymbol{\omega}_{|\phi} \circ \psi. \end{aligned} \tag{39}$$

The infinitesimal equivariance, under $\mathfrak{diff}(I)$, is $\boldsymbol{L}_{X^v}\boldsymbol{\omega} = \frac{d}{ds} R^{\star}_{\psi_s}\boldsymbol{\omega}\,|_{s=0} = \frac{d}{ds}\,\psi_s^{-1}{}_*\,\boldsymbol{\omega} \circ \psi_s\,|_{s=0} = [X, \boldsymbol{\omega}]_{\Gamma(\text{TP})} = [\boldsymbol{\omega}, X]_{\mathfrak{diff}(I)}$. The space of connection $\mathscr{C}$ is an affine space modeled on the vector space $\Omega^1_{\text{tens}}(\Phi, \mathfrak{diff}(I))$: Given $\boldsymbol{\omega} \in \mathscr{C}$ and $\boldsymbol{\beta} \in \Omega^1_{\text{tens}}(\Phi, \mathfrak{diff}(I))$, we have that $\boldsymbol{\omega}' = \boldsymbol{\omega} + \boldsymbol{\beta} \in \mathscr{C}$. As foretold, $\boldsymbol{\omega}$ induces a covariant derivative on standard tensorial forms via $\boldsymbol{D} : \Omega^{\bullet}_{\text{tens}}(\Phi, \rho) \to \Omega^{\bullet+1}_{\text{tens}}(\Phi, \rho)$, $\boldsymbol{\alpha} \mapsto \boldsymbol{D}\boldsymbol{\alpha} = \boldsymbol{d}\boldsymbol{\alpha} + \rho_*(\boldsymbol{\omega})\boldsymbol{\alpha}$. The curvature of $\boldsymbol{\omega}$ is $\boldsymbol{\Omega} \in \Omega^2_{\text{tens}}(\Phi, \mathfrak{diff}(I))$ and is given by Cartan structure equation

$$\boldsymbol{\Omega} = \boldsymbol{d}\boldsymbol{\omega} + \tfrac{1}{2}[\boldsymbol{\omega}, \boldsymbol{\omega}]_{\mathfrak{diff}(I)}, \tag{40}$$

and thus satisfies the Bianchi identity $\boldsymbol{D}\boldsymbol{\Omega} = \boldsymbol{d}\boldsymbol{\Omega} + [\boldsymbol{\omega}, \boldsymbol{\Omega}]_{\mathfrak{diff}(I)} \equiv 0$. On tensorial forms, one shows that $\boldsymbol{D} \circ \boldsymbol{D} = \rho_*(\boldsymbol{\Omega})$.

Given the defining properties (39), using Eqs. (18) and (32) one finds that a connection gauge transforms as

$$\boldsymbol{\omega}^{\boldsymbol{\psi}} := \Xi^{\star}\boldsymbol{\omega} = \boldsymbol{\psi}_*^{-1}\,\boldsymbol{\omega} \circ \boldsymbol{\psi} + \boldsymbol{\psi}_*^{-1}\boldsymbol{d}\boldsymbol{\psi}. \tag{41}$$

Correspondingly, its $\mathfrak{aut}_v(\Phi) \simeq \mathfrak{diff}(I)$ transformation is $\boldsymbol{L}_{\boldsymbol{X}^v}\boldsymbol{\omega} = \boldsymbol{d}\boldsymbol{X} + [\boldsymbol{\omega}, \boldsymbol{X}]_{\mathfrak{diff}(I)}$. Similarly, the finite gauge transformation of the curvature is $\boldsymbol{\Omega}^{\boldsymbol{\psi}} := \Xi^{\star}\boldsymbol{\Omega} = \boldsymbol{\psi}_*^{-1}\,\boldsymbol{\Omega} \circ \boldsymbol{\psi}$, and is a special case of Eq. (33). Linearly, it is $\boldsymbol{L}_{\boldsymbol{X}^v}\boldsymbol{\Omega} = [\boldsymbol{\Omega}, \boldsymbol{X}]_{\mathfrak{diff}(I)}$, as a special case of Eq. (35).

A cocyclic connection 1-form $\boldsymbol{\varpi} \in \Omega^1_{\text{eq}}(\Phi, \mathfrak{g})$ is defined by the two following properties:

$$\begin{aligned} \boldsymbol{\varpi}_{|\phi}\big(X^v_{|\phi}\big) &= \frac{d}{ds}C(\phi; \psi_s)\bigg|_{s=0} = a(X, \phi) \in \mathfrak{g}, \quad \text{for } X \in \mathfrak{diff}(I), \\ R^{\star}_{\psi}\boldsymbol{\varpi}_{|\phi^{\psi}} &= \mathrm{Ad}_{C(\phi;\psi)^{-1}}\,\boldsymbol{\varpi}_{|\phi} + C(\phi; \psi)^{-1}\boldsymbol{d}C(\ ;\psi)_{|\phi}. \end{aligned} \tag{42}$$

The infinitesimal equivariance, under $\mathfrak{diff}(I)$, is thus given by $\boldsymbol{L}_{X^v}\boldsymbol{\varpi} = \frac{d}{d\tau} R^{\star}_{\psi_\tau}\boldsymbol{\varpi}\,|_{\tau=0} = \boldsymbol{d}a(X;\ ) + [\boldsymbol{\varpi}, a(X;\ )]_{\mathfrak{g}}$. The space of twisted connections $\bar{\mathscr{C}}$ is an affine space modeled on the vector space $\Omega^1_{\text{tens}}(\Phi, \mathfrak{g})$: Given $\boldsymbol{\omega} \in \bar{\mathscr{C}}$ and $\boldsymbol{\beta} \in \Omega^1_{\text{tens}}(\Phi, \mathfrak{g})$, we have that $\boldsymbol{\omega}' = \boldsymbol{\omega} + \boldsymbol{\beta} \in \bar{\mathscr{C}}$. A *cocyclic covariant derivative* is defined as the first-order linear operator $\bar{\boldsymbol{D}} : \Omega^{\bullet}_{\text{tens}}(\Phi, C) \to \Omega^{\bullet+1}_{\text{tens}}(\Phi, C)$, $\boldsymbol{\alpha} \mapsto \bar{\boldsymbol{D}}\boldsymbol{\alpha} := \boldsymbol{d}\boldsymbol{\alpha} + \boldsymbol{\varpi}\boldsymbol{\alpha}$. The curvature 2-form of $\boldsymbol{\varpi}$ is defined by

$$\bar{\boldsymbol{\Omega}} := \boldsymbol{d}\boldsymbol{\varpi} + \tfrac{1}{2}[\boldsymbol{\varpi}, \boldsymbol{\varpi}]_{\mathfrak{g}} \quad \in \Omega^2_{\text{tens}}(\Phi, \mathfrak{g}). \tag{43}$$

It thus satisfies the Bianchi identity, $\bar{\boldsymbol{D}}\bar{\boldsymbol{\Omega}} = \boldsymbol{d}\bar{\boldsymbol{\Omega}} + [\boldsymbol{\varpi}, \bar{\boldsymbol{\Omega}}]_{\mathfrak{g}} = 0$. On cocyclic tensorial forms, we have $\bar{\boldsymbol{D}} \circ \bar{\boldsymbol{D}} = \rho_*(\bar{\boldsymbol{\Omega}})$.

The gauge transformation of a twisted connection is, by Eq. (42) and Eqs. (18) and (32),

$$\boldsymbol{\varpi}^{\boldsymbol{\psi}} := \Xi^{\star}\boldsymbol{\varpi} = \mathrm{Ad}_{C(\boldsymbol{\psi})^{-1}}\,\boldsymbol{\varpi} + C(\boldsymbol{\psi})^{-1}\boldsymbol{d}C(\boldsymbol{\psi}), \tag{44}$$

See Ref. [32] for a proof. Correspondingly, its transformation under $\mathfrak{aut}_v(\Phi) \simeq \mathfrak{diff}(I)$ is $\boldsymbol{L}_{\boldsymbol{X}^v}\boldsymbol{\varpi} = \boldsymbol{d}a(\boldsymbol{X}) + [\boldsymbol{\varpi}, a(\boldsymbol{X})]_{\mathfrak{g}}$. Finite and infinitesimal general gauge transformations of the curvature are given by $\bar{\boldsymbol{\Omega}}^{\boldsymbol{\psi}} := \Xi^{\star}\bar{\boldsymbol{\Omega}} = \mathrm{Ad}_{C(\boldsymbol{\psi})^{-1}}\,\bar{\boldsymbol{\Omega}}$ and $\boldsymbol{L}_{\boldsymbol{X}^v}\bar{\boldsymbol{\Omega}} = [\bar{\boldsymbol{\Omega}}, a(\boldsymbol{X})]_{\mathfrak{g}}$. These illustrate Eqs. (33) and (35).

D. Associated bundle of regions and integration

We aim to define integration on I geometrically, as an operation on what we call the *associated bundle of regions*. Bundles associated with a principal bundle are built from representations, or spaces supporting the action, of its structure group. The associated bundle of region is built from the "defining representation" of $\mathrm{Diff}(I)$: the σ algebra of closed sets (intervals) of I, $\boldsymbol{i}(I) := \{i \subset I \mid i \text{ closed set}\}$ [38]. As usual, one first defines the right action of $\mathrm{Diff}(I)$ on the direct product space $\Phi \times \boldsymbol{i}(I)$:

$$(\Phi \times \boldsymbol{i}(I)) \times \mathrm{Diff}(I) \to \Phi \times \boldsymbol{i}(I),$$
$$((\phi, i), \psi) \mapsto \bar{R}_\psi(\phi, i) := (\psi^*\phi, \psi^{-1}(i)). \tag{45}$$

The associated bundle of regions is then defined as the quotient of the product space by this right action:

$$\mathcal{R}(I) = \Phi \times_{\mathrm{Diff}(I)} \boldsymbol{i}(I) := \Phi \times \boldsymbol{i}(I)/\sim . \tag{46}$$

It is a standard result of bundle theory that its space of sections $\Gamma(\mathcal{R}(I)) := \{\bar{\boldsymbol{r}} : \mathcal{M} \to \mathcal{R}(I)\}$ is isomorphic to

$$\Omega^0_{\mathrm{tens}}(\Phi, \boldsymbol{i}(I)) := \{\boldsymbol{r} : \Phi \to \boldsymbol{i}(I), \phi \to \boldsymbol{r}(\phi) \mid R^\star_\psi \boldsymbol{r} = \psi^{-1}(\boldsymbol{r})\}. \tag{47}$$

A 0-form $\boldsymbol{r}(\phi) = \boldsymbol{r}(x, t)$ may be understood as a "field-dependent" set of I, i.e., a region of I defined in a "ϕ*relative*" and $\mathrm{Diff}(I)$-equivariant way. By Eqs. (33)– (35), its gauge transformations, under $\mathbf{Aut}_v(\Phi) \simeq \mathbf{Diff}(I)$ and $\mathfrak{aut}_v(\Phi) \simeq \mathfrak{diff}(I)$, are, respectively,

$$\boldsymbol{r}^{\boldsymbol{\psi}} = \boldsymbol{\psi}^{-1}(\boldsymbol{r}) \quad \text{and} \quad \boldsymbol{L}_{\boldsymbol{X}^v}\boldsymbol{r} = -\boldsymbol{X}(\boldsymbol{r}). \tag{48}$$

Integration map. Integration on I may provide such an example of equivariant functional. For the detailed elaboration of the viewpoint on integration on a manifold as an operation on the associated bundle of region on field space (see Sec. 3.5.2 of Ref. [2]). Here, we go straight to the point.

We consider the "dual representation" $\Omega^\bullet(I)$ of $\mathrm{Diff}(I)$, i.e., dual to $\boldsymbol{i}(I)$ with respect to the $\mathrm{Diff}(I)$-invariant *integration pairing*:

$$\langle\ ,\ \rangle : \boldsymbol{\Omega}^{\mathrm{top}}(i) \times \boldsymbol{i}(I) \to \mathbb{R}, \quad (\omega, i) \mapsto \langle \omega, i\rangle := \int_i \omega. \tag{49}$$

The invariance property is

$$\langle \psi^*\omega, \psi^{-1}(i)\rangle = \langle \omega, i\rangle \to \int_{\psi^{-1}(i)} \psi^*\omega = \int_i \omega. \tag{50}$$

A familiar identity that upon linearization gives

$$\langle \mathfrak{L}_X\omega, i\rangle + \langle \omega, -X(i)\rangle = 0 \to \int_i \mathfrak{L}_X\omega + \int_{-X(i)} \omega = 0. \tag{51}$$

This may be understood as a *continuity equation* for the action of $\mathfrak{diff}(I)$. By Stokes theorem, the de Rham derivative d on $\Omega^\bullet(I)$ and the boundary operator ∂ on $\boldsymbol{i}(I)$ are adjoint operators with respect to the integration pairing:

$$\langle d\omega, i\rangle = \langle \omega, \partial i\rangle \to \int_i d\omega = \int_{\partial i} \omega. \tag{52}$$

Observe that integration of a 0-form, say ϕ, on zero-dimensional submanifolds $\tau \subset I$ is the *evaluation operation*:

$$\mathsf{ev}(\phi, \tau) := \int_\tau \phi = \phi(\tau). \tag{53}$$

The banal notation $\phi(\tau)$ should not obscure the fact that this operation is $\mathrm{Diff}(I)$-invariant by definition; $\mathsf{ev} \circ \bar{R}_\psi = \mathsf{ev}$.

Considering now $\boldsymbol{\alpha} \in \Omega^\bullet_{\mathrm{eq}}(\Phi, \Omega^{\mathrm{top}}(i))$, the field-dependent top forms on I, we define integration on $\Phi \times \boldsymbol{i}(I)$:

$$\mathcal{I}(\boldsymbol{\alpha}_{|\phi}, i) = \langle \boldsymbol{\alpha}_{|\phi}, i \rangle := \int_i \boldsymbol{\alpha}_{|\phi}. \tag{54}$$

We may use the shorthand notation $\boldsymbol{\alpha}_i$ for the integral $\mathcal{I}(\boldsymbol{\alpha}, i)$ when no confusion is likely. We have naturally $\boldsymbol{d}\mathcal{I}(\boldsymbol{\alpha}, i) = \mathcal{I}(\boldsymbol{d}\boldsymbol{\alpha}, i)$ and $\boldsymbol{\iota}_{\mathfrak{X}}\mathcal{I}(\boldsymbol{\alpha}, i) = \mathcal{I}(\boldsymbol{\iota}_{\mathfrak{X}}\boldsymbol{\alpha}, i)$ for $\mathfrak{X} \in \Gamma(T\Phi)$. The induced actions of $\mathrm{Diff}(I)$ and $\mathbf{Diff}(I) \simeq \mathbf{Aut}_v(\Phi)$ on such integrals (their "equivariance" and "gauge transformations") are

$$\begin{aligned}
\tilde{R}^\star_\psi \mathcal{I}(\boldsymbol{\alpha},\ )_{|(\psi^*\phi,\ \psi^{-1}(i))} &:= \langle R^\star_\psi \boldsymbol{\alpha}_{|\psi^*\phi},\ \psi^{-1}(i)\rangle = \int_{\psi^{-1}(i)} R^\star_\psi \boldsymbol{\alpha}_{|\psi^*\phi} = \int_{\psi^{-1}(i)} \psi^* \boldsymbol{\alpha}_{|\psi^*\phi} \\
&= \int_i \boldsymbol{\alpha}_{|\phi} = \mathcal{I}(\boldsymbol{\alpha},\ )_{|(\phi,\ i)}, \\
\tilde{\Xi}^\star \mathcal{I}(\boldsymbol{\alpha},\ )_{|(\Xi(\phi),\ \boldsymbol{\psi}^{-1}(i))} &:= \langle \Xi^\star \boldsymbol{\alpha}_{|\Xi(\phi)},\ \boldsymbol{\psi}^{-1}(i)\rangle = \int_{\boldsymbol{\psi}^{-1}(i)} \Xi^\star \boldsymbol{\alpha}_{|\Xi(\phi)}.
\end{aligned} \tag{55}$$

We may write the above as ${\boldsymbol{\alpha}_i}^\psi = \langle \boldsymbol{\alpha}, i\rangle^\psi = \boldsymbol{\alpha}_i$ and ${\boldsymbol{\alpha}_i}^{\boldsymbol{\psi}} = \langle \boldsymbol{\alpha}, i\rangle^{\boldsymbol{\psi}}$, respectively. Remark that, in the latter case, acting with $\boldsymbol{d}$ will affect the transformed region $\boldsymbol{\psi}^{-1}(i)$ due to the ϕ dependence of $\boldsymbol{\psi}$. We have indeed

$$\begin{aligned}
\boldsymbol{d}(\bar{\Xi}^\star\langle \boldsymbol{\alpha}, i\rangle) &= \langle \boldsymbol{d}\,\Xi^\star\boldsymbol{\alpha},\ \boldsymbol{\psi}^{-1}(i)\rangle + \langle \Xi^\star\boldsymbol{\alpha}, \boldsymbol{d}\boldsymbol{\psi}^{-1}(i)\rangle \\
&= \langle \Xi^\star\boldsymbol{d}\boldsymbol{\alpha},\ \boldsymbol{\psi}^{-1}(i)\rangle + \langle \Xi^\star\boldsymbol{\alpha}, -\boldsymbol{\psi}_*^{-1}\boldsymbol{d}\boldsymbol{\psi} \circ \boldsymbol{\psi}^{-1}(i)\rangle \\
&= \bar{\Xi}^\star\langle \boldsymbol{d}\boldsymbol{\alpha}, i\rangle - \langle \mathfrak{L}_{\boldsymbol{\psi}_*^{-1}\boldsymbol{d}\boldsymbol{\psi}}\ \Xi^\star\boldsymbol{\alpha},\ \boldsymbol{\psi}^{-1}(i)\rangle, \\
\text{or}\quad \boldsymbol{d}({\boldsymbol{\alpha}_i}^{\boldsymbol{\psi}}) &= (\boldsymbol{d}\boldsymbol{\alpha}_i)^{\boldsymbol{\psi}} - \langle \mathfrak{L}_{\boldsymbol{\psi}_*^{-1}\boldsymbol{d}\boldsymbol{\psi}}\ \Xi^\star\boldsymbol{\alpha},\ \boldsymbol{\psi}^{-1}(i)\rangle.
\end{aligned} \tag{56}$$

The identity (51) has been used to conclude. Also, while we used the standard relation $[\boldsymbol{\Xi}^\star, \boldsymbol{d}] = 0$ holding on Φ—which means that $\boldsymbol{d}$ is, as is well known, a *natural operator* on Φ—this result implies that on $\Phi \times \boldsymbol{i}(I)$ we have $[\bar{\boldsymbol{\Xi}}^\star, \boldsymbol{d}] \neq 0$—meaning that $\boldsymbol{d}$ is not a natural operator on $\Phi \times \boldsymbol{i}(I)$. Fortunately, the commutator is a boundary term, $\langle \iota_{\boldsymbol{\psi}_*^{-1}\boldsymbol{d}\boldsymbol{\psi}}\ \Xi^\star\boldsymbol{\alpha}, \partial(\boldsymbol{\psi}^{-1}(i))\rangle$, since $\boldsymbol{\alpha}$ is a top form on i and by Eq. (52); a fact that will bear on our discussion of the relational variational principle for MFT in Sec. IV B.

By linearization of Eq. (55), the actions of $\mathfrak{diff}(I)$ and $\mathbf{\mathfrak{diff}}(I) \simeq \mathbf{\mathfrak{aut}}_v(\Phi)$ are found to be

$$\begin{aligned}
\frac{d}{ds}\,\tilde{R}^\star_{\psi_s}\mathcal{I}(\boldsymbol{\alpha}, i)\bigg|_{s=0} &= \langle \boldsymbol{L}_{X^v}\boldsymbol{\alpha},\ i\rangle + \langle \boldsymbol{\alpha},\ -X(i)\rangle = \int_i \mathfrak{L}_X\boldsymbol{\alpha} + \int_{-X(i)} \boldsymbol{\alpha} = 0, \\
\frac{d}{ds}\,\tilde{\Xi}^\star_s\mathcal{I}(\boldsymbol{\alpha}, i)\bigg|_{s=0} &= \langle \boldsymbol{L}_{\boldsymbol{X}^v}\boldsymbol{\alpha},\ i\rangle + \langle \boldsymbol{\alpha},\ -\boldsymbol{X}(i)\rangle = \int_i \boldsymbol{L}_{\boldsymbol{X}^v}\boldsymbol{\alpha} + \int_{-\boldsymbol{X}(i)} \boldsymbol{\alpha}.
\end{aligned} \tag{57}$$

We may write the above, suggestively, as $\delta_X\,\boldsymbol{\alpha}_i = \delta_X\,\langle \boldsymbol{\alpha}, i\rangle = 0$ and $\delta_{\boldsymbol{X}}\,\boldsymbol{\alpha}_i = \delta_{\boldsymbol{X}}\,\langle \boldsymbol{\alpha}, i\rangle$, respectively.

For $\boldsymbol{\alpha} \in \Omega^\bullet_{\mathrm{tens}}(\Phi, \Omega^{\mathrm{top}}(i))$, we have that $\boldsymbol{\alpha}^{\boldsymbol{\psi}} = \Xi^\star\boldsymbol{\alpha} = \boldsymbol{\psi}^*\boldsymbol{\alpha}$, so that its integral is $\mathbf{Diff}(I)$-invariant, ${\boldsymbol{\alpha}_i}^{\boldsymbol{\psi}} = \boldsymbol{\alpha}_i$. Linearly, the $\mathbf{\mathfrak{diff}}(I)$ invariance of its integral implies

$$\begin{aligned}
\delta_X\boldsymbol{\alpha}_i = 0 \to \langle \boldsymbol{L}_{\boldsymbol{X}^v}\boldsymbol{\alpha},\ i\rangle + \langle \boldsymbol{\alpha},\ -\boldsymbol{X}(i)\rangle = 0, \quad \boldsymbol{X} \in \mathbf{\mathfrak{diff}}(I), \\
\langle \mathfrak{L}_X\alpha,\ i\rangle + \langle \boldsymbol{\alpha},\ -\boldsymbol{X}(i)\rangle = 0 \to \int_i \mathfrak{L}_X\alpha\ + \int_{-\boldsymbol{X}(i)} \boldsymbol{\alpha} = 0,
\end{aligned} \tag{58}$$

which again can be interpreted as a continuity equation. Therefore, when $\boldsymbol{\alpha}$ is tensorial, its integral $\boldsymbol{\alpha}_i = \mathcal{I}(\boldsymbol{\alpha}, i)$ is a well-defined object on the bundle of regions $\mathcal{R}(I) = \Phi \times \boldsymbol{i}(I)/\sim$. Since $\boldsymbol{\alpha}_i$ is

constant along $\mathrm{Diff}(I)$-orbits in $\Phi \times \boldsymbol{i}(I)$, one may define a $\mathrm{Diff}(I)$-equivariant $\boldsymbol{i}(I)$-valued function $\boldsymbol{r}_{\mathcal{I}}$ on Φ, using $\pi_{\boldsymbol{i}(I)} : \Phi \times \boldsymbol{i}(I) \to \boldsymbol{i}(I)$, as

$$\begin{aligned} \boldsymbol{r}_{\mathcal{I}}(\phi) &:= \pi_{\boldsymbol{i}(I)}(\phi, i)_{|\mathcal{I}(\boldsymbol{\alpha}_{|\phi}, i)=\mathrm{cst}} \equiv i, \\ \boldsymbol{r}_{\mathcal{I}}(\psi^*\phi) &:= \pi_{\boldsymbol{i}(I)}(\psi^*\phi, \psi^{-1}(i))_{|\mathcal{I}(\boldsymbol{\alpha}_{|\phi}, i)=\mathrm{cst}} \equiv \psi^{-1}(i). \end{aligned} \tag{59}$$

This map outputs intervals of I defined in a "*ϕ-relative*" and $\mathrm{Diff}(I)$-equivariant way, i.e., $\boldsymbol{r}_{\mathcal{I}} \in \Omega^0_{\mathrm{tens}}(\Phi, \boldsymbol{i}(I))$. By the isomorphism $\Omega^0_{\mathrm{tens}}(\Phi, \boldsymbol{i}(I)) \simeq \Gamma(\mathcal{R}(I))$, $\boldsymbol{r}_{\mathcal{I}}$ is equivalent to a section of the bundle of regions, $\bar{\boldsymbol{r}}_{\mathcal{I}} : \mathcal{M} \to \mathcal{R}(I)$. The $\mathbf{Diff}(I)$ invariance of $\boldsymbol{\alpha}_i$ also implies that $\boldsymbol{d}(\boldsymbol{\alpha}_i{}^{\boldsymbol{\psi}}) = \boldsymbol{d}\boldsymbol{\alpha}_i$, i.e.,

$$\boldsymbol{d}\,\langle \boldsymbol{\psi}^*\boldsymbol{\alpha}, \boldsymbol{\psi}^{-1}(i)\rangle = \boldsymbol{d}\langle \boldsymbol{\alpha}, i\,\rangle = \langle \boldsymbol{d}\boldsymbol{\alpha}, i\,\rangle \to \boldsymbol{d}\int_{\boldsymbol{\psi}^{-1}(i)} \boldsymbol{\psi}^*\boldsymbol{\alpha} = \boldsymbol{d}\int_i \boldsymbol{\alpha} = \int_i \boldsymbol{d}\boldsymbol{\alpha}. \tag{60}$$

Finally, one proves the following identity:

$$\langle \boldsymbol{d}\boldsymbol{\alpha}, i\rangle^{\boldsymbol{\psi}} = \langle \boldsymbol{d}\boldsymbol{\alpha}, i\rangle + \langle \mathfrak{L}_{\boldsymbol{d}\boldsymbol{\psi}\circ\boldsymbol{\psi}^{-1}}\boldsymbol{\alpha}, i\,\rangle, \tag{61}$$

which will be important when discussing the variational principle in MFT.

III. MECHANICAL FIELD THEORY ON Φ: DYNAMICS

We develop MFT on Φ as a "general-relativistic" field theory. We illustrate the abstract framework via the simplest, nonrelativistic, case. Its $\mathrm{Diff}(I)$ covariance is shown to encode its relational character.

The classical (i.e., nonquantum) dynamics is specified by a Lagrangian $L \in \Omega^0_{\mathrm{tens}}(\Phi, \Omega^{\mathrm{top}}(i))$, with equivariance

$$\begin{aligned} R^\star_\psi L &= \psi^* L, \quad \psi \in \mathrm{Diff}(I), \\ \boldsymbol{L}_{X^v} L &= \mathfrak{L}_X L = d\iota_X L, \quad X \in \mathfrak{diff}(I). \end{aligned} \tag{62}$$

We may observe that this can be rewritten in terms of the (trivial Abelian) 1-cocycle $c(\phi, \psi) := \psi^* L - L$, easily shown to satisfy (24), as

$$\begin{aligned} R^\star_\psi L &= L + c(_, \psi), \quad \psi \in \mathrm{Diff}(I), \\ \boldsymbol{L}_{X^v} L &= a(X; _), \quad X \in \mathfrak{diff}(I), \end{aligned} \tag{63}$$

where $a(X;\phi) = \mathfrak{L}_X L$ is a (trivial Abelian) $\mathfrak{diff}(I)$ 1-cocycle: the classical $\mathfrak{diff}(I)$ anomaly. It satisfies the Abelian version of Eq. (26), which reproduces the Wess-Zumino consistency condition: $X^v \cdot a(Y;\phi) - Y^v \cdot a(X;\phi) = a([X, Y]_{\mathfrak{diff}(I)}; \phi)$. As observed earlier, the gauge transformation of tensorial forms is controlled by their equivariance. So, as a special case of Eqs. (33)–(35), the gauge transformation of the Lagrangian is immediately found to be

$$\begin{aligned} L^{\boldsymbol{\psi}} &= L + c(_, \boldsymbol{\psi}) = \boldsymbol{\psi}^* L, \quad \boldsymbol{\psi} \in \mathbf{Diff}(I), \\ \boldsymbol{L}_{\boldsymbol{X}^v} L &= a(\boldsymbol{X}; _) = \mathfrak{L}_{\boldsymbol{X}} L, \quad \boldsymbol{X} \in \mathfrak{diff}(I). \end{aligned} \tag{64}$$

Such a transformation [under $\mathbf{Diff}(I)$] is known in the literature as the "*field-dependent gauge transformation*" of L, while the equivariance [under $\mathrm{Diff}(I)$] is then called "field-independent gauge transformation." The integral of the Lagrangian L over a region $i \subset I$ is the action functional

$$\begin{aligned} S : \Phi \times \boldsymbol{i}(I) &\to \mathbb{R}, \\ (\phi, i) &\mapsto S := \langle L, i\rangle = \int_i L(\phi). \end{aligned} \tag{65}$$

It is naturally invariant under the action of $\mathrm{Diff}(I)$, as a special case of Eq. (55), and since the Lagrangian L is tensorial, it is furthermore $\mathbf{Diff}(I)$-invariant, $S^{\boldsymbol{\psi}} = S$. This is the first indication that

mechanical field theory has a much larger covariance group than initially conceived, as we shall shortly confirm in detail. The linear invariance of S is

$$\delta_X S = 0 \Rightarrow \langle \mathfrak{L}_X L,\ i\rangle + \langle L,\ -\boldsymbol{X}(i)\rangle = 0, \quad \text{or} \quad \int_i \mathfrak{L}_X L = \int_{X(i)} L, \quad \text{for } \boldsymbol{X} \in \mathfrak{diff}(I), \tag{66}$$

as a special case of Eq. (58). The same holds for $X \in \mathfrak{diff}(I)$. One may see it as a continuity equation for the actions of $\mathrm{Diff}(I)$ and $\mathbf{Diff}(I)$. Since S is constant along $\mathrm{Diff}(I)$-orbits in $\Phi \times \boldsymbol{i}(I)$, it is a well-defined section of the associated bundle of regions $\mathcal{R}(I) = \Phi \times \boldsymbol{i}(I)/\sim$, and induces a $\mathrm{Diff}(I)$ equivariant $\boldsymbol{i}(I)$-valued function $\boldsymbol{r}_S$ on Φ as in Eq. (59).

A. The variational principle for MFT and its covariance group

The relevant object for the variational principle, over a bounded region $i \subset I$ with boundary $\partial i = \{i_0, i_1\}$ (the codimension 1, dim = 0, two points boundary), is $\boldsymbol{d}S = \langle \boldsymbol{d}L, i\rangle$, with $\boldsymbol{d}L = d\phi \frac{\delta}{\delta\phi} L = \boldsymbol{d}x \frac{\delta}{\delta x} L + \boldsymbol{d}t \frac{\delta}{\delta t} L \ \in \Omega^1(\Phi, \Omega^1(i))$. From general considerations laid out in Sec. 5.1.3 of Ref. [2], we can write the variational principle as

$$\boldsymbol{d}S_{|\phi} = \int_i \boldsymbol{d}L_{|\phi} = 0, \quad \text{with} \quad \boldsymbol{d}L_{|\phi} = \boldsymbol{E}_{|\phi} + d\boldsymbol{\theta}_{|\phi} = E(\boldsymbol{d}\phi;\phi) + d\theta(\boldsymbol{d}\phi;\phi), \tag{67}$$

with $\boldsymbol{E} \in \Omega^1(\Phi, \Omega^1(i))$ the field equations 1-form, and $\boldsymbol{\theta} \in \Omega^1(\Phi, \Omega^0(i))$ is referred to as the presymplectic potential current in the "covariant phase-space" approach to gRGFT (see Appendix A). The space of solutions is

$$\mathcal{S} := \{\phi \in \Phi \mid \boldsymbol{E}_{|\phi} = 0\}. \tag{68}$$

A fundamental goal is to assess its stability under the action of the structure and gauge groups of Φ. To do so, we shall consider the equivariance and gauge transformations of all objects involved in Eq. (67).

First, observe that while L is tensorial, $\boldsymbol{d}L \in \Omega^1(\Phi, \Omega^1(I))$ is not since $\boldsymbol{d}$ does not preserve tensoriality (as stressed in Sec. II C). The equivariance and verticality properties of $\boldsymbol{d}L$ are obtained from the naturality of $\boldsymbol{d}$, $[R^\star_\psi, \boldsymbol{d}] = 0$, and Eq. (62):

$$\begin{aligned} R^\star \boldsymbol{d}L &= \psi^* \boldsymbol{d}L, \\ \iota_{X^v} \boldsymbol{d}L &= a(X,\phi) = \mathfrak{L}_X L = d\iota_X L. \end{aligned} \tag{69}$$

So, its gauge transformation is easily deduced geometrically, via Eq. (32), to be

$$(\boldsymbol{d}L)^{\boldsymbol{\psi}} = \boldsymbol{\psi}^*(\boldsymbol{d}L + \mathfrak{L}_{\boldsymbol{d}\boldsymbol{\psi}\circ\boldsymbol{\psi}^{-1}} L) = \boldsymbol{\psi}^*(\boldsymbol{d}L + d\iota_{\boldsymbol{d}\boldsymbol{\psi}\circ\boldsymbol{\psi}^{-1}} L). \tag{70}$$

This is cross-checked by $[\Xi^\star, d] = 0$ and Eq. (64). This immediately implies that

$$(\boldsymbol{d}S)^{\boldsymbol{\psi}} = \int_{\boldsymbol{\psi}^{-1}(i)} (\boldsymbol{d}L)^{\boldsymbol{\psi}} = \int_i \boldsymbol{d}L + d\iota_{\boldsymbol{d}\boldsymbol{\psi}\circ\boldsymbol{\psi}^{-1}} L = \boldsymbol{d}S + \langle \iota_{\boldsymbol{d}\boldsymbol{\psi}\circ\boldsymbol{\psi}^{-1}} L, \partial i\rangle, \tag{71}$$

which is indeed a special case of Eq. (61). This result indicates that $\mathcal{S}$ is stable under the action of the gauge group $\mathbf{Diff}(I)$. This we now establish explicitly by finding the gauge transformation of $\boldsymbol{E}$. And since it comes with no additional work, we also give that of the presymplectic potential $\boldsymbol{\theta}$. For this, we first write their equivariance and verticality properties. The former are immediate,

$$R^\star_\psi \boldsymbol{E} = \psi^* \boldsymbol{E} \quad \text{and} \quad R^\star_\psi \boldsymbol{\theta} = \psi^* \boldsymbol{\theta}. \tag{72}$$

To find their verticality properties, we first use Eqs. (67) and (69), from which follows the identity

$$\iota_{X^v} \boldsymbol{E} = d(\iota_X L - \iota_{X^v} \boldsymbol{\theta}). \tag{73}$$

Then, using the identity derived in Eq. (318) in Ref. [2], according to which in gRGFT one has

$$\iota_X L - \iota_{X^v}\boldsymbol{\theta} = E(\iota_X\phi;\phi) - d\theta(\iota_X\phi;\phi), \tag{74}$$

and observing that in MFT $\phi \in \Omega^0(I)$ so that $\iota_X\phi = 0$, we get

$$\iota_{X^v}\boldsymbol{E} = 0, \quad \text{and} \quad \iota_{X^v}\boldsymbol{\theta} = \iota_X L. \tag{75}$$

Therefore, the field equations are tensorial, $\boldsymbol{E} \in \Omega^1_{\text{tens}}(\Phi, \Omega^1(I))$, not the presymplectic potential, $\boldsymbol{\theta} \in \Omega^1_{\text{eq}}(\Phi, \Omega^1(I))$. Their respective gauge transformations are thus immediately found to be

$$\boldsymbol{E}^{\boldsymbol{\psi}} = \boldsymbol{\psi}^*\boldsymbol{E} \quad \text{and} \quad \boldsymbol{\theta}^{\boldsymbol{\psi}} = \boldsymbol{\psi}^*(\boldsymbol{\theta} + \iota_{d\boldsymbol{\psi}\circ\boldsymbol{\psi}^{-1}}L). \tag{76}$$

These are special cases of the gauge transformations of $\boldsymbol{E}$[Eqs. (319)–(324) in Ref. [2] and $\boldsymbol{\theta}$ [Eq. (238) in Ref. [24]] in gRGFT.

The tensoriality of the field equations 1-form $\boldsymbol{E}$ on the MFS Φ, and its gauge transformation above, imply that $\mathcal{S}$ is indeed stable under the action of $\mathbf{Diff}(I)$. More precisely, Eqs. (72) and (76) establish that the space of solution is a principal $\text{Diff}(I)$ subbundle of the MFS,

$$\mathcal{S} \xrightarrow{\pi} \mathcal{M}_{\mathcal{S}}, \tag{77}$$

with base $\mathcal{M}_{\mathcal{S}}$ the moduli space of solutions [its point $[\phi] = [(x,t)]$ are $\text{Diff}(I)$ classes], and with gauge group $\mathbf{Diff}(I)_{|\mathcal{S}} \simeq \mathbf{Aut}_v(\mathcal{S})$. This means that the *covariance group* of MFT is not just the (structure) group $\text{Diff}(I)$ (of field-independent diffeomorphisms) but the much bigger (gauge) group $\mathbf{Diff}(I)$ (of field-dependent diffeomorphisms). This is typical of gRGFT, as established in full generality in Ref. [2]. To the best of our knowledge, this fact was first noticed in the case of general relativity by Refs. [39,40], and later by Ref. [41], which considered metric-dependent diffeomorphisms $\boldsymbol{\psi}(g) \in \text{Diff}(M)$ with M the "spacetime" manifold [42].

B. The relationality of MFT: the hole and point-coincidence arguments

The local symmetries of a gRGFT encode the relational character of the physics it describes, as reminded in Sec. I. MFT is no exception: Its $\text{Diff}(I)$ covariance signals that physical d.o.f. are best represented as relations among the fields $\phi = \{x, t\}$. This insight arises in exactly the same way as in general-relativistic physics (GR, in particular), via the conjunction of a "hole argument," raising a problem, and a "point-coincidence argument," that solves it. See Ref. [2] for a complete technical treatment, and Ref. [1] for an in-depth conceptual analysis. For the sake of pedagogy and clarity, let us spell out the logic in detail for MFT.

An *a priori* look at the kinematics of MFT may let one think that I is the physical timeline [43], call it Time, parametrizing the evolution of both the fields $x(\tau) = x^a(\tau)$, with (internal) "spatial" d.o.f., and of the clock field $t(\tau)$. The situation appears congruent with Newton's famous definition of time in the *Scholium* of the *Principia* (1687):

> "Absolute, true, and mathematical time, of itself, and from its own nature, flows equably without relation to anything external, and by another name is called duration: [...]"

quoted from Ref. [44]. We may interpret this passage as referring to I. It is immediately followed by

> "[...] relative, apparent, and common time, is some sensible and external (whether accurate or unequable) measure of duration by the means of motion, which is commonly used instead of true time; such as an hour, a day, a month, a year."

That would be (abstractly) the clock field t understood as a physical object. Yet, a challenge to this simple view, based on a naive reading of the mathematical framework, arises from the $\text{Diff}(I)$ covariance of MFT, i.e., from the fact that the space of solutions is a $\text{Diff}(I)$-principal bundle $\mathcal{S} \to \mathcal{M}_{\mathcal{S}}$.

This challenge is set by the "hole argument": The $\mathrm{Diff}(I)$ covariance of the field equations $\boldsymbol{E}_{|\phi} = E(\boldsymbol{d}\phi;\phi) = 0$ implies that if $\phi = (x,t)$ is a solution, so is $\psi^*\phi$ for any $\psi \in \mathrm{Diff}(I)$. Now, considering two solutions $\phi, \phi' \in \mathcal{O}_\phi \subset \mathcal{S}$, i.e., $\phi' = \psi^*\phi$, where ψ is a compactly supported diffeomorphism whose support $D_\psi \subset I$ is the "hole," we have that $\phi = \phi'$ on I/D_ψ, but $\phi \neq \phi'$ on the time interval D_ψ. Therefore, $\boldsymbol{E} = 0$ have an ill-defined Cauchy problem; i.e., the field equations cannot uniquely determine time evolution, so that MFT seems to be badly undeterministic. To avoid this, one has to admit that all solutions within the same $\mathrm{Diff}(I)$-orbit $\mathcal{O}_\phi$ represent the *same* physical state. This implies that MFT, unable to physically distinguish between $\mathrm{Diff}(I)$-related solutions of $\boldsymbol{E} = 0$, consequently cannot physically distinguish $\mathrm{Diff}(I)$-related points of I either. In other words, I is not Time, the physical timeline. But then, how are Time and deterministically evolving mechanical d.o.f. encoded in MFT?

The solution comes from the "point-coincidence argument," a term coined by John Stachel to refer to Einstein's 1915 conceptual breakthrough by which he understood the meaning of diffeomorphisms covariance in GR. In MFT, it is the assertion that its physical content (thus its observables) is exhausted by the set of coincidences between the "spatial" fields x and the clock field t, and that the description of these coincidences is invariant under $\mathrm{Diff}(I)$. The statement of the $\mathrm{Diff}(I)$ invariance of pointwise mutual relations $\mathcal{R}$ between the mechanical fields $\phi = \{x, t\}$ may be formally written as

$$\begin{aligned} &\mathcal{R} : \mathcal{S} \times I \to \mathcal{S} \times I/\sim \quad \overset{\simeq}{\to} \text{ relational mechanical physical d.o.f.,} \\ &(\phi,\tau) \mapsto (\phi,\tau) \sim (\psi^*\phi, \psi^{-1}(\tau)) \mapsto \mathcal{R}(\phi;\tau) = \mathcal{R}(\psi^*\phi;\psi^{-1}(\tau)), \end{aligned} \tag{78}$$

where $\mathcal{S} \times I/\sim$ is the quotient of the direct product space $\mathcal{S} \times I$ by the equivalence relation $(\phi,\tau) \sim (\psi^*\phi, \psi^{-1}(\tau))$, i.e., an associated bundle to the bundle of solution $\mathcal{S}$ as defined in Sec. II D—for which, see also Sec. 3.5 of Ref. [2]. Remark that the above is actually also true on Φ, i.e., kinematically (off shell). The true physical mechanical d.o.f., subject to deterministic Time evolution, are the coincidental relations between x and t—standardly denoted by $x(t)$. This reciprocally implies that, in MFT, a point of physical time, a moment of Time, is *defined* by the coincidence of the fields x and t. Time is thus relationally defined, encoded in the totality of relations, actual (on shell) and potential (off shell), between the fields x and t as described by Eq. (78). The manifold I drops out of the physical picture, precisely as does M in GR.

This has us revisit the above second part of the Newton quote: contra the idea that "common time, is some sensible and external [...] measure of duration *by the means of motion*, which is commonly used instead of true time" (our emphasis), it appears that in mechanics, true Time is indeed defined "by the means of motion," i.e., by physical mechanical d.o.f., and that there is no need for an abstract notion of "mathematical time [...] without relation to anything external." All that is needed are clocks, which is indeed consistent with actual experimental practice [45]. The $\mathrm{Diff}(I)$ covariance of MFT thus encodes the relational codefinition of physical mechanical d.o.f. and of Time.

The problem of time and the boundary problem. This relational core of MFT is fundamental and provides an intuitive grasp on how the relational physics of the broader class of gRGFT may alleviate, or outright dissolve, "problems" accepted as valid issues in the literature. Let us highlight the two more prominently discussed.

The first is the "problem of time" in general-relativistic physics (and its ramifications for QG): It is the concern that if time evolution is understood as time coordinate change on M, itself interpreted as a special diffeomorphism, then observables cannot evolve in time since they must be $\mathrm{Diff}(M)$-invariant by definition. This is known as the "frozen formalism" or "frozen time" problem in GR (see, e.g., Refs. [46–48]). Its analog in the context of MFT is that, interpreting I as the physical Time and understanding Time evolution as change in the parameter τ, observables in mechanics have trivial dynamics; they are "timeless," since they are $\mathrm{Diff}(I)$-invariant by definition.

We know this reasoning to be obviously incorrect in mechanics, where there is no such "problem of time." The correct understanding in MFT is as stated above, following the point-coincidence

argument: The invariant mechanical d.o.f. (78) are the relations between the fields x and t, and physical Time evolution is not defined by change of both with respect to $\tau \in I$, but by change of one with respect to the other; in that case, variation of the "spatial" field compared to variation of the clock field t, as is expressed by the very familiar functional form $x(t)$. Said otherwise, physical Time evolution is the change of the relational structure of the field $\phi = \{x, t\}$, a $\mathrm{Diff}(I)$-invariant quantity that has a well-defined Cauchy problem for the field equations $\boldsymbol{E} = 0$, i.e., a deterministic Time evolution.

The same resolution in principle applies in general-relativistic physics and gRGFT—granted the caveats by Kuchař in Sec. 3 of Ref. [47]—whereby relational invariant physical d.o.f. have well-defined physical spatiotemporal evolution understood, not as variation of individual (mathematical) fields across the manifold M (which disappears from the physical picture), but as the variation of their relational structure. The relational understanding of gRGFT physics should defuse the "problem of time" (at least its classical, i.e., nonquantum, variant).

The second problem, conceptually closely related, is the "boundary problem": In the form often encountered in the literature, it is the statement that "spacetime boundaries break local symmetries (diffeomorphisms and/or gauge transformations)" [37,49–53]. It is sometimes followed, e.g., in the covariant phase-space literature, by the claim that "Goldstone modes," a.k.a. "edge modes," must arise at spacetime boundaries as a result of such symmetry breaking when studying gRGFT over bounded regions. Further still, some claim that these boundary modes are key to a deeper understanding of quantum gRGFT. The above statement, though, is flatly wrong.

What is actually meant by it is the similar yet nonequivalent statement that "boundaries ∂U of bounded regions $U \subset M$ are not preserved by local symmetries," which is trivially true but physically inconsequential, since it is logically equivalent to the hole argument. The point-coincidence argument has us realize that the manifold of physical events (spacetime points) is not M, but is represented by the $\mathrm{Diff}(M)$-invariant relational structure among fields d.o.f. Boundaries of spacetime regions are thus relationally defined in a $\mathrm{Diff}(M)$-invariant way (see Ref. [54]).

In MFT, the implausibility of such "boundary problem" is transparent. It would imply to say that $\mathrm{Diff}(I)$ is "broken" at the boundary $\partial i = \{\tau_0, \tau_1\}$ of an interval $i \subset I$ over which we study MFT, i.e., that boundary clock-time readings $t_0 = t(\tau_0)$ and $t_1 = t(\tau_1)$—and boundary field configurations $x_0 = x(\tau_0)$ and $x_1 = x(\tau_1)$—are not $\mathrm{Diff}(I)$-invariant. One would then claim that "edge modes" need to be introduced, or arise as "Goldstone modes," at ∂i as a result of this $\mathrm{Diff}(I)$ breaking, and perhaps that they are key to understand MFT on bounded regions $i \subset I$ (i.e., mechanics in finite time interval) and its quantization (i.e., quantum mechanics).

It is certainly clear enough that this logic is quite foreign to what we know to be the correct understanding of both classical and quantum mechanics, where "time boundaries" are of no particular physical consequence—aside from setting arbitrary boundary conditions—and there is no need for extra d.o.f. at the initial and final instant of the Time interval considered. Again, this "boundary problem" is logically equivalent to the hole argument, thus solved by the point-coincidence argument that has us realize that Time, thus boundaries of Time intervals (which we may write $\{x_0[t_0], x_1[t_1]\}$, suggestively), are relationally defined in a $\mathrm{Diff}(I)$-invariant way.

C. Model of MFT: nonrelativistic mechanics

Let us consider, for concreteness, the simplest model of the MFT framework: The nonrelativistic case in (flat) 3-space, where a single clock field is used. This example plays the role of the fundamental concrete realization of the general framework developed in the present work. In particular, it allows one to exhibit explicitly the parametrized theory, the clock dressing procedure, and, consequently, the resulting dressed classical action and PI (see Secs. IV B 1 and IV C 1, respectively), thereby providing a direct comparison with the standard deparametrization and gauge-fixing treatments of parametrized mechanics—moreover, the link with the standard approach in *configuration spacetime* is provided. The purpose is not merely to recover ordinary QM, but to

show geometrically that its standard PI formulation already possesses an intrinsically relational and dressed structure.

The construction of the Lagrangian requires a proper use of Cartan calculus on I and the structure on the target space T of the fields (geometry), as well as simple dimensional analysis (physics). Let us then start by further generalities about the former.

On I, the de Rham derivative of the fields $\phi = (x, t)$ are

$$d\phi = (dx, dt) = d\tau \, \frac{\partial \phi}{\partial \tau} =: \dot{\phi} \, d\tau = (\dot{x}, \dot{t}\,) \, d\tau \quad \in \Omega^1(I). \tag{79}$$

Let us suppose we are in the case $\phi : I \to \mathsf{T} = \mathbb{E}^{3(N)} \times \mathcal{T}$, then this is

$$dx = d\tau \, \frac{\partial x}{\partial \tau} =: \dot{x} \, d\tau \quad \in \Omega^1(I, \mathbb{R}^{3(N)}) \quad \text{and} \quad dt = d\tau \, \frac{\partial t}{\partial \tau} =: \dot{t} \, d\tau \quad \in \Omega^1(I, \mathbb{R}), \tag{80}$$

where dt is the "clock 1-form field." It has a natural dual, the "clock vector field,"

$$\partial_t \in \Gamma(TI), \quad \text{s.t.} \quad \iota_{\partial_t} dt = 1, \quad \text{so} \quad \partial_t = \frac{1}{\dot{t}} \frac{\partial}{\partial \tau} = \frac{1}{\dot{t}} \, \partial_\tau. \tag{81}$$

Remark that it is of the form $\boldsymbol{X} = \boldsymbol{X}(\phi) \in \Gamma(I)$, i.e., it is a field-dependent vector field of I. The action of $\mathrm{Diff}(I)$ on Eq. (79) is, by the naturality of d, easily found to be

$$\psi^* d\phi = d\psi^* \phi = (\dot{\phi} \circ \psi) \, \dot{\psi} \, d\tau. \tag{82}$$

We shall denote $\phi' := \psi^* \phi$, so $d\phi' = \psi^* d\phi$. The action of $\mathrm{Diff}(I)$ on the dual clock vector field (81) is thus

$$\begin{aligned} \partial_{t'} = \partial_{\psi^* t} &:= \left[\frac{\partial}{\partial \tau} (t \circ \psi) \right]^{-1} \partial_\tau = [(\dot{t} \circ \psi) \, \dot{\psi}]^{-1} \partial_\tau \\ &= (\dot{t} \circ \psi)^{-1} \, \dot{\psi}^{-1} \partial_\tau = (\dot{t} \circ \psi)^{-1} \, [\partial_\tau (\psi^{-1}) \circ \psi] \partial_\tau = (\dot{t} \circ \psi)^{-1} \, [(\psi^{-1})_* \, \partial_\tau \circ \psi] \\ &= (\psi^{-1})_* \, \partial_t \circ \psi. \end{aligned} \tag{83}$$

The first line being consistent with $\iota_{t'} dt' = \iota_{\partial_{\psi^* t}} \psi^* dt = 1$, the last showing the ϕ-dependent vector field $\boldsymbol{X}(\phi) = \partial_t$ to have equivariance $R^\star_\psi \boldsymbol{X} = (\psi^{-1})_* \boldsymbol{X} \circ \psi$, thus to be an element of the gauge Lie algebra of Φ, $\boldsymbol{X}(\phi) = \partial_t \in \mathfrak{diff}(I)$. One defines the velocity and acceleration fields of x as

$$\begin{aligned} v &:= \mathfrak{L}_{\partial_t} x = \partial_t x = \frac{\dot{x}}{\dot{t}} \in \Omega^0(I, \mathbb{R}^{3(N)}), \quad \text{s.t.} \quad dx = v dt, \\ a &:= \mathfrak{L}_{\partial_t} v = \partial_t v = \frac{\dot{v}}{\dot{t}} \in \Omega^0(I, \mathbb{R}^{3(N)}), \quad \text{s.t.} \quad dv = a dt, \end{aligned} \tag{84}$$

where indeed, in terms of x, we have $a = (\ddot{x}\dot{t} - \dot{x}\ddot{t}\,)\dot{t}^{-3}$. Their transformation under $\mathrm{Diff}(I)$ is, by a well-known property of Lie derivatives and by Eq. (83),

$$\begin{aligned} v' &:= \psi^* v = \psi^* (\mathfrak{L}_{\partial_t} x) = \mathfrak{L}_{(\psi^{-1}{}_* \partial_t \circ \psi)} (\psi^* x) = \mathfrak{L}_{\partial_{t'}} x' = \partial_{t'} x' \\ &= \frac{\dot{x} \circ \psi}{\dot{t} \circ \psi} = v \circ \psi, \\ a' &:= \psi^* a = \psi^* (\mathfrak{L}_{\partial_t} v) = \mathfrak{L}_{(\psi^{-1}{}_* \partial_t \circ \psi)} (\psi^* v) = \mathfrak{L}_{\partial_{t'}} v' = \partial_{t'} v' \\ &= \frac{\dot{v} \circ \psi}{\dot{t} \circ \psi} = a \circ \psi. \end{aligned} \tag{85}$$

From this, we have $dx' = v' dt'$ and $dv' = a' dt'$, as one would heuristically expect.

The Lagrangian must be an $\mathbb{R}$-valued top form $L(\phi) \in \Omega^1(I, \mathbb{R})$. And since I is considered dimensionless, L must have the dimension of an action, mass $\times$ length^2 $\times$ time^{-1}, $\mathrm{ML^2T^{-1}}$. The dimensions of the spatial and clock fields are $|x| = L$ and $|t| = T$, so that since again I

is dimensionless, $|dx| = L$ and $|dt| = T$. It follows that $|\partial_t| = \mathrm{T}^{-1}$. The only intrinsic physical parameters associated with N point particles are their masses $m = \{m_1, \ldots, m_N\}$. Thus, using the standard scalar product $\langle _, _ \rangle$ on $\mathbb{R}^3$, we may write kinetic terms for the spatial fields: $\frac{m}{2}\langle \iota_{\partial_t} dx, dx\rangle = \frac{m}{2}\langle v, dx\rangle := \Sigma_{i=1}^{N} \frac{m}{2}\langle v_i, dx_i\rangle$. Given a potential functional $V = V(\phi)$ with the dimension of an energy, $\mathrm{ML}^2\mathrm{T}^{-2}$, we may build a potential term $V dt$. The simplest Lagrangian we may write is then

$$\begin{aligned} L(\phi) = L(x,t) &= \frac{m}{2}\big\langle \iota_{\partial_t} dx, dx\big\rangle - V(x,t)\,dt \qquad \in \Omega^0_{\text{tens}}(\Phi, \Omega^1(I)) \\ &= \left(\frac{m}{2}\langle \dot{x}, \dot{x}\rangle\, \dot{t}^{-1} - V(x,t)\,\dot{t}\right) d\tau \\ &= \left(\frac{m}{2}\langle v, v\rangle - V(x,t)\right) dt. \end{aligned} \tag{86}$$

As we shall see shortly, this describes precisely the standard nonrelativistic particles with potential, which shall next be understood within the dressed MFT framework. From this perspective, the usual quantum-mechanical PI will arise as the dressed expression associated with the relational clock sector, rather than from an *ad hoc* gauge-fixing prescription. The dressing of the classical theory is provided in Sec. IV B 1—where we also remark the difference between dressing via the DFM and gauge fixing—and its relational PI quantization presented and discussed in Sec. IV C 1.

By what precedes, the $\mathrm{Diff}(I)$ covariance, or equivariance, of L is easily shown: $\psi^* L(\phi) = (\frac{m}{2}\langle v', v'\rangle - V(x', t'))\,dt' = L(\phi') = L(\psi^*\phi)$, otherwise written as $R^\star_\psi L = \psi^* L$. Notice that we cannot write a kinetic term for the clock field t: Only with the help of a physical constant with the dimension of a velocity could we possibly write one. This is how, from the MFT perspective, one arrives at relativistic mechanics; it hinges upon the introduction of what we should call the *Einstein constant* $\boldsymbol{c}$, s.t. $|\boldsymbol{c}| = \mathrm{LT}^{-1}$ (a.k.a. the "speed of light"). This will be further elaborated elsewhere.

To write the variational principle (67) as geometrically as possible, i.e., by starting from the first line of Eq. (86), let us write a useful lemma. Define the variation of the clock vector field by $\partial_{\boldsymbol{d}t} := \boldsymbol{d}\partial_t = (\boldsymbol{d}\dot{t}^{-1})\,\partial_\tau = -(\dot{t}^{-2}\boldsymbol{d}t)\,\partial_\tau$. We have also that $\dot{t}^{-1}\boldsymbol{d}\dot{t} = \dot{t}^{-1}\partial_\tau(\boldsymbol{d}t) = \partial_t(\boldsymbol{d}t) = \iota_{\partial_t} d(\boldsymbol{d}t) = \mathfrak{L}_{\partial_t}(\boldsymbol{d}t)$. Then, we find that

$$\iota_{\boldsymbol{d}t} dx = -\dot{x}\dot{t}^{-2}\boldsymbol{d}\dot{t} = -\dot{x}\dot{t}^{-1}\,\dot{t}^{-1}\boldsymbol{d}\dot{t} = v\mathfrak{L}_{\partial_t}(\boldsymbol{d}t). \tag{87}$$

From this, and by the observing that $\langle \iota_{\partial_t} d(\boldsymbol{d}x), dx\rangle = \langle \iota_{\partial_t} dx, d(\boldsymbol{d}x)\rangle$—both terms giving $\langle v, \frac{\partial}{\partial\tau}(\boldsymbol{d}x)\rangle\, d\tau$—we find

$$\begin{aligned} \boldsymbol{d}L &= \frac{m}{2}\big\langle \iota_{\partial_{\boldsymbol{d}t}} dx, dx\big\rangle + \frac{m}{2}\big\langle \iota_{\partial_t} d(\boldsymbol{d}x), dx\big\rangle + \frac{m}{2}\big\langle \iota_{\partial_t} dx, d(\boldsymbol{d}x)\big\rangle - \boldsymbol{d}V(x,t)\,dt - V(x,t)\,d(\boldsymbol{d}t) \\ &= -\frac{m}{2}\langle v, dx\rangle \mathfrak{L}_{\partial_t}(\boldsymbol{d}t) + m\big\langle \mathfrak{L}_{\partial_t}\boldsymbol{d}x, dx\big\rangle - \left(\frac{\delta V}{\delta t}\boldsymbol{d}t + \left\langle \frac{\delta V}{\delta x}, \boldsymbol{d}x\right\rangle\right) dt - d(V(x,t)\,\boldsymbol{d}t) + dV(x,t)\boldsymbol{d}t \\ &= -\frac{m}{2}\mathfrak{L}_{\partial_t}(\langle v, dx\rangle \boldsymbol{d}t) + \frac{m}{2}\mathfrak{L}_{\partial_t}(\langle v, dx\rangle)\boldsymbol{d}t \;+\; m\mathfrak{L}_{\partial_t}(\langle \boldsymbol{d}x, dx\rangle) - m\big\langle \mathfrak{L}_{\partial_t} dx, \boldsymbol{d}x\big\rangle \;-\; \cdots \\ &= -\frac{m}{2}d\big(\big\langle v, \iota_{\partial_t} dx\big\rangle \boldsymbol{d}t\big) + \frac{m}{2}d\big(\big\langle v, \iota_{\partial_t} dx\big\rangle\big)\boldsymbol{d}t \;+\; m\,d\big(\big\langle \boldsymbol{d}x, \iota_{\partial_t} dx\big\rangle\big) - m\big\langle d\big(\iota_{\partial_t} dx\big), \boldsymbol{d}x\big\rangle \;-\; \cdots \\ &= -\left\langle d(mv) + \frac{\delta V}{\delta x}dt, \boldsymbol{d}x\right\rangle + \left[d\left(\frac{m}{2}\langle v, v\rangle + V(x,t)\right) - \frac{\delta V}{\delta t}dt\right]\boldsymbol{d}t \\ &\quad + d\left[\langle mv, \boldsymbol{d}x\rangle - \left(\frac{m}{2}\langle v, v\rangle + V(x,t)\right)\boldsymbol{d}t\right] \\ &=: E(\boldsymbol{d}x;\phi) + E(\boldsymbol{d}t;\phi) \;+\; d[\theta(\boldsymbol{d}x;\phi) + \theta(\boldsymbol{d}t;\phi)] = E(\boldsymbol{d}\phi;\phi) + d\theta(\boldsymbol{d}\phi;\phi) = \boldsymbol{E} + d\boldsymbol{\theta}, \end{aligned} \tag{88}$$

where we used the fact that $\mathfrak{L}_X\beta = d\iota_X\beta$ for β a 1-form on I. The presymplectic potential can be rewritten as

$$\boldsymbol{\theta} = \langle p_x, \boldsymbol{d}x\rangle + p_t\,\boldsymbol{d}t = \langle\langle p_\phi, \boldsymbol{d}\phi\rangle\rangle, \tag{89}$$

where $p_x := mv$ is the canonical momentum associated with the spatial fields x, i.e., the linear momentum, while $p_t := -(\frac{m}{2}\langle v, v\rangle + V(x,t))$ is the canonical momentum associated with the clock field t, i.e., the mechanical energy, and $\langle\langle _, _\rangle\rangle$ denotes the scalar product on $\mathbb{R}^{3(N)} \times \mathbb{R}$. Notice that an identity holds between momenta:

$$p_t + \frac{1}{2m}\langle p_x, p_x\rangle + V = 0, \tag{90}$$

which is often called a Hamiltonian "constraint" in the canonical analysis. This relates to the fact that, in the usual approach, mechanical energy is given by the standard Hamiltonian $H(p_x, x) = \frac{1}{2m}\langle p_x, p_x\rangle + V(x,t) = -p_t$.

It is then interesting to notice that the field equations $\boldsymbol{E} = 0$ may be seen as continuity equations controlling the nonconservation of the canonical momenta—the gradient of the potential acting as a source of momenta:

$$\boldsymbol{E} = E(\boldsymbol{d}\phi;\phi) = -\left\langle\!\!\left\langle dp_\phi + \frac{\delta V}{\delta\phi}dt, \boldsymbol{d}\phi\right\rangle\!\!\right\rangle = 0, \quad \forall\,\boldsymbol{d}\phi \Rightarrow dp_\phi = -\frac{\delta V}{\delta\phi}dt. \tag{91}$$

Defining the *force* 1-form as $F dt := -\frac{\delta V}{\delta x}dt$, and remembering that the 3-acceleration is $a := \partial_t v$, so that $dv = d\tau\,\partial_\tau v = d\tau\,\dot{t}\,\dot{t}^{-1}\partial_\tau v = dt\,\partial_t v = dt\,a$, the field equation for the spatial field x is

$$\begin{aligned} E(\boldsymbol{d}x;\phi) = 0, \quad \forall\,\boldsymbol{d}x \Rightarrow dp_x = F dt, \quad \text{i.e., } m\,\partial_\tau v\,d\tau = F\dot{t}\,d\tau \\ \hookrightarrow F = m\,\dot{t}^{-1}\partial_\tau v = m\,\partial_t v = m\,a. \end{aligned} \tag{92}$$

The standard form of Newton's equation is recognized. The field equation $E(\boldsymbol{d}t;\phi) = 0$ for the clock field t states that mechanical energy is not conserved for t-dependent potentials (i.e., nonconservative forces). It may be noticed that the field equations for x and t are not independent here; $E(\boldsymbol{d}x;\phi) = 0$ implies $E(\boldsymbol{d}t;\phi) = 0$ [55].

We can verify the properties (75) explicitly in the case at hand: First, we find that

$$\iota_{X^v}\boldsymbol{\theta} = \langle p_x, \mathfrak{L}_X x\rangle + p_t\,\mathfrak{L}_X t = (\langle p_x, v\rangle + p_t)\,\mathfrak{L}_X t = \left(\frac{1}{m}\langle p_x, p_x\rangle + p_t\right)\iota_X dt = \iota_X L, \tag{93}$$

where we use the fact that $\mathfrak{L}_X x = v\mathfrak{L}_X t$ following from $dx = vdt$ and Eq. (90). As we have seen in Sec. III A, the property $\iota_{X^v}\boldsymbol{\theta} = \iota_X L$ is key to the tensoriality of the field equations by the identity (73). We may also prove it directly, using the form (91) as well as Eq. (90):

$$\begin{aligned} \iota_{X^v}\boldsymbol{E} &= -\left\langle dp_x + \frac{\delta V}{\delta x}dt, \mathfrak{L}_X x\right\rangle + \left[dp_t - \frac{\delta V}{\delta t}dt\right]\mathfrak{L}_X t \\ &= \left[-\left\langle dp_x + \frac{\delta V}{\delta x}dt, v\right\rangle + d\left(\frac{1}{2m}\langle p_x, p_x\rangle + V(x,t)\right) - \frac{\delta V}{\delta t}dt\right]\mathfrak{L}_X t \\ &= \left[-\frac{1}{m}\langle dp_x, p_x\rangle + \frac{1}{2m}d\langle p_x, p_x\rangle \;\; - \left\langle\frac{\delta V}{\delta x}, vdt\right\rangle - \frac{\delta V}{\delta t}dt + dV(x,t)\right]\mathfrak{L}_X t = 0. \end{aligned} \tag{94}$$

Either way, the tensoriality of the field equation 1-form, $\boldsymbol{E} \in \Omega^1_{\text{tens}}(\Phi)$ so $\boldsymbol{E}^{\boldsymbol{\psi}} = \boldsymbol{\psi}^*\boldsymbol{E}$, implies not only that the space of solutions of Newtonian mechanics is a $\mathrm{Diff}(I)$ bundle, $\mathcal{S} \to \mathcal{M}_S$, but that its group of covariance is $\mathbf{Diff}(I)$; i.e., Newtonian mechanics is covariant under field-dependent reparametrization.

Link with standard approaches. The values of the fields $\phi(\tau) = (x(\tau), t(\tau))$ are coordinatizations of a point p in the target space $\mathsf{T} = \mathbb{E}^{3N} \times \mathcal{T}$, which is called in Ref. [27] the (nonrelativistic)

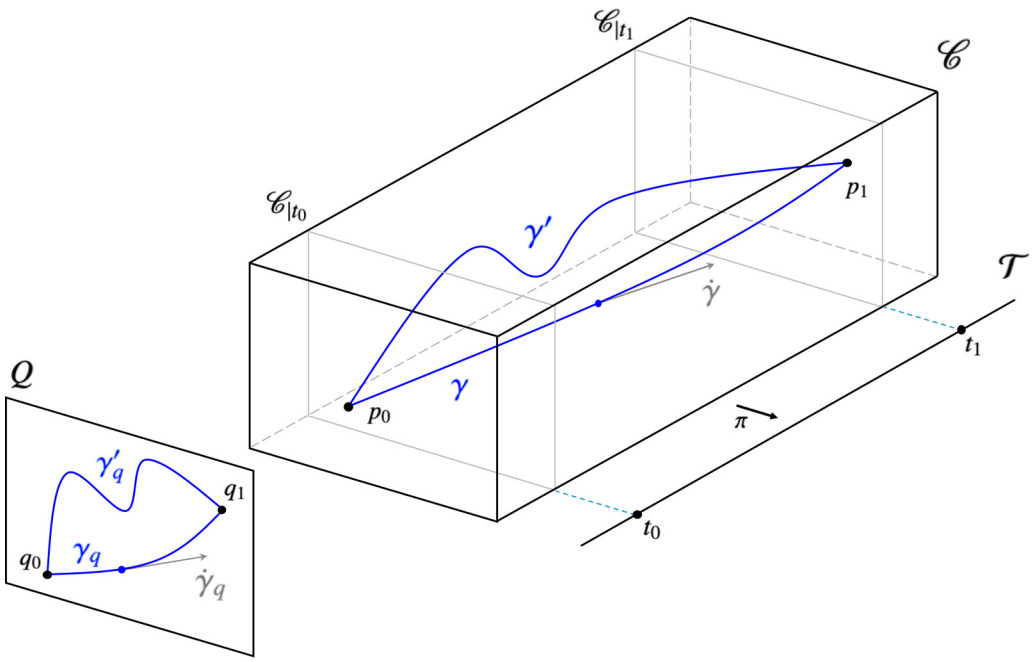

FIG. 1. The configuration spacetime bundle $\mathscr{C}$ vs the standard configuration space Q.

configuration spacetime and noted $\mathscr{C}$—also called "extended configuration space" or "space of partial observables" in Refs. [19,25]. In Ref. [27], it is stressed as an essential fact that $\mathscr{C}$ is furthermore a principal bundle over $\mathcal{T}$—with structure group $H = \mathbb{R}^{3N}$ when one considers, as we do here, structureless particles whose only d.o.f. are their position. The fibers of $\mathscr{C}$ are isomorphic to the configuration space Q of the standard approach to mechanics, which may then be called the "typical fiber" of $\mathscr{C}$. In a bundle coordinate system for $\mathscr{C}$, we may write $p = (q, t)$ with $q \in Q$ and $t \in \mathcal{T}$, i.e., indeed $(q, t) = (x(\tau), t(\tau))$ or $p = \phi(\tau)$. The standard "phase space" T^*Q is thus seen to be the isomorphic, at each time t, to the vertical cotangent to the fibers $V_p^*\mathscr{C}$ for $p = (q, t)$, so that the cotangent $T^*\mathscr{C}$ is the "extended phase space" as mentioned, e.g., in Refs. [18,25]. The latter is often closely associated with the so-called "parametric approach" [16], which MFT developed here generalizes.

The mechanical fields $\phi = (x, t) \in \Phi$, which are a *point* in the MFS Φ, are a parametric coordinatization of a curve $\gamma \in \mathscr{C}$. But since such a curve is an intrinsic geometrical object in $\mathscr{C}$, indifferent to parametrization, it corresponds to the full $\mathrm{Diff}(I)$-orbit $[\phi] = [x, t]$ of ϕ: so that $\gamma = [\phi]$. Which means that the base space $\mathcal{M}$ of the MFS bundle $\Phi \to \mathcal{M}$ is exactly the space of curves, or paths, $\mathcal{P}(\mathscr{C})$ in the configuration spacetime $\mathscr{C}$: $\mathcal{M} = \mathcal{P}(\mathscr{C})$. We may say that the latter is a good coordinatization of the former. Curves $\gamma \in \mathcal{P}(\mathscr{C})$ then "project" as curves in the standard fiber Q, $\gamma_q \in \mathcal{P}(Q)$: Hence, the standard approach on Q is often said to be "deparametrized" or "unparametrized" (see Fig. 1).

It is worth noting that the variational principle (67) of MFT, performed on Φ, is thus conceptually distinct from those one may perform on either $\mathscr{C}$ or Q: In the latter cases, one is working on the spaces $\mathcal{P}(\mathscr{C})$ or $\mathcal{P}(Q)$ containing the $\mathrm{Diff}(I)$-invariant kinematical *physical* d.o.f. only. In other words, in the standard approaches one already works on the moduli space $\mathcal{M} = \mathcal{P}(\mathscr{C})$, representing the *relational* d.o.f. among the mechanical fields $\phi = (x, t)$. Therefore, the set of critical curves $\gamma^c \in \mathcal{P}_c(\mathscr{C})$, or $\gamma_q^c \in \mathcal{P}_c(Q)$, i.e., the physical histories, is the moduli space $\mathcal{M}_\mathcal{S}$ of the bundle of solutions $\mathcal{S} \to \mathcal{M}_\mathcal{S}$ of MFT. This observation will motivate the notion of *relational quantization*, and its implementation via the DFM.

D. Quantization of MFT

As a 1D classical gRGFT, MFT can be quantized via the standard toolbox of QFT, yielding a 1D QFT of the bosonic fields $\phi = \{x, t\}$ on I. The latter's relation to standard QM can then be examined. It may be remarked that the idea of (nonrelativistic) quantum mechanics being a 1D QFT is not new; it is, e.g., explicitly stated by Zee [15] to argue that the formalism of QFT naturally extends standard QM: But it is the standard unparametrized version, without $\mathrm{Diff}(I)$ covariance, that is talked about. The parametrized version of the relativistic particle, the relativistic model of MFT, is mentioned multiple times by Polchinski [56], but more as a motivational example for string theory than as a full treatment. Typically, Lagrangian QFT uses PI quantization. The PI for an MFT with action $S(\phi) = \int L(\phi)$ is $Z(\phi) = \int \mathcal{D}\phi\, e^{i/\hbar S(\phi)}$, where $\mathcal{D}\phi = \mathcal{D}x\mathcal{D}t$ is a (formal) measure on Φ allowing to define integration.

Considering the PI as a functional $Z : \Phi \to \mathbb{C}$, $\phi \mapsto Z(\phi)$, the most general transformation compatible with the right action of $\mathrm{Diff}(I)$ on Φ is

$$R^\star_\psi Z = C(\ \psi)^{-1} Z, \quad \text{i.e.,} \quad Z(\psi^*\phi) = C(\phi;\psi)^{-1} Z(\phi), \tag{95}$$

where $C(\phi;\psi) = e^{i/\hbar \int c(\phi;\psi)}$ is a 1-cocycle for $\mathrm{Diff}(I)$ as described in Eqs. (23) and (24). The latter has to come from the lack of invariance of the measure, as the action S is $\mathrm{Diff}(I)$-invariant, and its linearization $a(X;\phi)$ is a 1-cocycle for $\mathfrak{diff}(I)$, which is the theories' $\mathfrak{diff}(I)$*anomaly*: Its defining property (26) reduces, since $\mathfrak{u}(1)$ is Abelian, to $X^v \cdot a(Y;\phi) - Y^v \cdot a(X;\phi) = a([X,Y]_{\mathfrak{diff}(I)};\phi)$ and is otherwise known as the *Wess-Zumino consistency condition*. Meaning that, in general, a PI is a cocyclic tensorial 0-form, $Z \in \Omega^0_{\mathrm{tens}}(\Phi, C)$.

But, typically, for MFT the measure is also $\mathrm{Diff}(I)$-invariant; the PI has trivial equivariance $R^\star_\psi Z = Z$, i.e., it is invariant, and thus basic $Z \in \Omega^0_{\mathrm{basic}}(\Phi, \mathbb{C})$. It therefore uniquely represents a PI $\tilde{Z} \in \Omega^0(\mathcal{M}, \mathbb{C})$ on the physical moduli space $\mathcal{M}$, formally written as $\tilde{Z}([\phi]) = \int \mathcal{D}[\phi] e^{i/\hbar S([\phi])}$. Yet, approached the standard way, the PI $Z(\phi)$ on Φ would need to be *gauge fixed*. As stated in Sec. II A, a gauge fixing is a choice of local section $\sigma : \mathcal{U} \to \Phi_{|\mathcal{U}}$. Concretely, it is specified by a gauge condition taking the form of an algebraic and/or differential equation on the field variables, $\mathscr{C}(\phi) = 0$, whose solutions constitute by definition the image of the local section σ: the gauge-fixing slice is $\mathcal{N} := \{\phi \in \Phi \,|\, \mathscr{C}(\phi) = 0\} = \sigma(\mathcal{U}) \subset \Phi$ is the image of the local section σ [57]. The gauge-fixed path integral is thus equivalent to integration of the pullback by σ of the integrand over the preimage of $\mathcal{N}$ by σ, the region $\mathcal{U} := \sigma^{-1}(\mathcal{N}) \subset \mathcal{M}$ containing only physical d.o.f.:

$$Z(\phi)_{|\,\mathrm{GF}} := \int_{\mathcal{N}=\sigma(\mathcal{U})} \mathcal{D}\phi\, e^{i/\hbar S(\phi)} = \int_{\mathcal{U}} \sigma^*(\mathcal{D}\phi\, e^{i/\hbar S(\phi)}) = \int_{\mathcal{U}} \mathcal{D}[\phi]_\sigma\, e^{i/\hbar S([\phi])_\sigma} =: \tilde{Z}([\phi])_{\sigma\,|\,\mathcal{U}}. \tag{96}$$

Note that $Z(\phi)_{|\,\mathrm{GF}}$ depends on σ and it is not invariant. That is the conceptual picture. Practically, the constraint $\mathscr{C}(\phi)$ may be enforced via BRST methods, implying the introduction of a ghost field ξ, Grassmann odd parameter placeholder for the gauge parameter $X \in \mathfrak{diff}(I)$, and of a BRST differential s, s.t. $sd + ds = 0$ and generating the bigraded algebra: $s\phi = \mathfrak{L}_\xi \phi = \iota_\xi d\phi$ and $s\xi = -\frac{1}{2}\mathfrak{L}_\xi \xi = -\frac{1}{2}[\xi, \xi]$. Clearly, it encodes the $\mathfrak{diff}(I)$ transformation of ϕ, and it is easily checked that $s^2 = 0$. The result is that $Z(\phi)_{|\mathrm{GF}}$ is expressed in terms of an effective action $S_{\mathrm{eff}}(\phi, \xi)$ in the same s-cohomology class as the original $S(\phi)$, and has thus the same observables (see, e.g., Sec. 4.2 of Ref. [56]).

It is interesting and conceptually important to realize that the PI $\tilde{Z} \in \Omega^0(\mathcal{M}, \mathbb{C})$ avoids these technicalities needed for gauge fixing by directly defining quantization on the space $\mathcal{M}$ of relational physical d.o.f. As observed above, the latter is precisely the space of paths in the configuration space-time $\mathscr{C}$, $\mathcal{M} = \mathcal{P}(\mathscr{C})$, which indeed represents the invariant relational d.o.f. among the mechanical fields ϕ. Therefore, $\tilde{Z} \in \Omega^0(\mathcal{P}(\mathscr{C}), \mathbb{C})$ is the standard PI of QM, and represents the quantization of the relational d.o.f. of MFT.

From this follows the first key message we want to convey: The PI typically used in GFT *is not* the analog, neither conceptual nor technical, of the PI of standard QM; the former is defined

on the field space Φ and is nonrelational, the latter is defined on the moduli space $\mathcal{M}$ and is fundamentally relational. This, in our view, strongly suggests that the most natural quantization scheme for (gR)GFT is what we shall call relational quantization.

Of course, the main issue is to find as good a representation ("coordinatization") of $\mathcal{M}$ as the one existing in MFT, $\mathcal{P}(\mathscr{C})$, whose points are relational variables (relational histories, actually). Indeed, one argument often provided as to why to resort to gauge fixing in (gR)GFT is that one cannot work with the moduli space $\mathcal{M}$. This is where basic (or equivariant) cohomology of field space Φ may play a key role: As observed in Sec. II B, it is isomorphic to the de Rham cohomology of $\mathcal{M}$, $\Omega^\bullet_{\text{basic}}(\Phi) \simeq \Omega^\bullet(\mathcal{M})$, and yet allows manipulation of fairly concrete expressions on Φ. Our main concern then is this: Given objects (forms) on Φ, how can one extract its "basic component"? Or rather, how to produce its "basic counterpart"? This is the question answered by the dressing field method.

IV. DRESSING FIELD METHOD AND RELATIONAL QUANTIZATION

The DFM is a formal yet systematic algorithm to construct basic forms on the field space Φ. In favorable situations, the elementary "dressed" variables it produces may be understood to encode the invariant relations among the d.o.f. of the "bare" fields $\phi \in \Phi$, hence its natural relational interpretation. It encompasses and generalizes various constructions of the literature, e.g., edge modes [37,49,58–60] (see Appendix A for a brief explanation of their introduction in covariant phase space), "gravitational dressings" [52,61–67], "dynamical reference frames" [68,69], or "embedding fields" [53,59,70,71]. The most complete technical and conceptual presentation of the DFM to date is provided in Ref. [2], and we draw from it the following simplified account giving the minimum necessary to formulate next the dressed MFT and its relational quantization.

A. Building basic forms via dressing

The DFM involves a conditional proposition: If one can identify, or build, a *dressing field* from the kinematics of a theory, i.e., its field space Φ, then it shows how basic forms on Φ can be built. Let us then define the pivotal notion in the context under consideration. Given J a reference 1D manifold, one defines the space of $\mathrm{Diff}(I)$-*dressing fields*

$$\mathcal{D}r[J,I] := \{\, \upsilon : J \to I \mid \upsilon^\psi := \psi^{-1} \circ \upsilon, \ \text{ with } \ \psi \in \mathrm{Diff}(I)\} \ \subset \ \mathrm{Hom}(J,I). \tag{97}$$

The linearization of their defining property is then $\delta_X \upsilon := -X \circ \upsilon$ for $X \in \mathfrak{diff}(I)$. The dressing map is defined as

$$|^{\boldsymbol{\upsilon}} : \Phi \ \to \ \Phi^\upsilon, \quad \phi \ \mapsto \ \phi^\upsilon := \ \upsilon^* \phi, \tag{98}$$

where $\phi^\upsilon = (x^\upsilon, t^\upsilon)$ are the *dressing* of the bare fields $\phi = (x,t)$. By definition, dressed fields in Φ^υ "live" on $\mathrm{Im}(\upsilon^*) \subset J$ and are thus expected to be $\mathrm{Diff}(I)$-invariant: explicitly, $(\upsilon^*\phi)^\psi := (\upsilon^\psi)^*(\phi^\psi) = (\psi^{-1} \circ \upsilon)^*(\psi^*\phi) = \upsilon^*\phi$. We next define a field-dependent $\mathrm{Diff}(I)$-dressing field as

$$\boldsymbol{\upsilon} : \Phi \to \ \mathcal{D}r[J,I], \quad \phi \ \mapsto \ \boldsymbol{\upsilon}(\phi), \quad \text{s.t. } R^\star_\psi \boldsymbol{\upsilon} = \psi^{-1} \circ \boldsymbol{\upsilon}, \quad \text{i.e.,} \quad \boldsymbol{\upsilon}(\phi^\psi) = \psi^{-1} \circ \boldsymbol{\upsilon}(\phi). \tag{99}$$

The infinitesimal equivariance is thus $\boldsymbol{L}_{X^\upsilon} \boldsymbol{\upsilon} = -X \circ \boldsymbol{\upsilon}$. Such ϕ-dependent dressing fields are thus tensorial (equivariant) 0-form on Φ, therefore their $\mathbf{Aut}_\upsilon(\Phi) \simeq \mathbf{Diff}(I)$ and $\mathfrak{aut}_\upsilon(\Phi) \simeq \mathfrak{diff}(I)$ transformations are, respectively,

$$\boldsymbol{\upsilon}^{\boldsymbol{\psi}} := \Xi^\star \boldsymbol{\upsilon} = \boldsymbol{\psi}^{-1} \circ \boldsymbol{\upsilon} \quad \text{and} \quad \boldsymbol{L}_{X^\upsilon} \boldsymbol{\upsilon} = -\boldsymbol{X} \circ \boldsymbol{\upsilon}. \tag{100}$$

Now, a ϕ-dependent dressing field induces the map

$$F_{\boldsymbol{\upsilon}} : \Phi \to \mathcal{M} \simeq \mathcal{P}(\mathscr{C}), \quad \phi \mapsto \ F_{\boldsymbol{\upsilon}}(\phi) := \phi^{\boldsymbol{\upsilon}} := \boldsymbol{\upsilon}(\phi)^* \phi \sim [\phi] \simeq \gamma, \quad \text{s.t.} \quad F_{\boldsymbol{\upsilon}} \circ R_\psi = F_{\boldsymbol{\upsilon}}. \tag{101}$$

The constancy along $\mathrm{Diff}(I)$-orbits is easy to show: $F_{\boldsymbol{\upsilon}}(\phi^\psi) = \boldsymbol{\upsilon}(\phi^\psi)^*(\phi^\psi) = (\psi^{-1} \circ \boldsymbol{\upsilon}(\phi))^* \psi^* \phi = \boldsymbol{\upsilon}(\phi)^*\phi =: F_{\boldsymbol{\upsilon}}(\phi)$, meaning that dressed fields $\phi^{\boldsymbol{\upsilon}} = \boldsymbol{\upsilon}(\phi)^*\phi$ indeed represent a whole $\mathrm{Diff}(I)$-orbit

$[\phi] \in \mathcal{M}$ of the bare fields $\phi \in \Phi$. The image of $F_{\boldsymbol{v}}$ can thus be seen as a "coordinatization" of $\mathcal{M}$, i.e., of the space of kinematical histories $\mathcal{P}(\mathscr{C})$. Furthermore, $\phi^{\boldsymbol{v}} = \phi^{\boldsymbol{v}(\phi)}$ is explicitly a ϕ-dependent coordinatization of the physical d.o.f. embedded in the bare fields ϕ. In other words, (kinematical) physical d.o.f. $[\phi] \simeq \gamma$ are represented in a manifestly relational way [72].

The map (101) is manifestly a ϕ-dependent realization of Φ's projection, $F_{\boldsymbol{v}} \sim \pi$, and thus in principle it allows to build basic forms on Φ by $\Omega^{\bullet}_{\text{basic}}(\Phi) = \text{Im}\,\pi^{\star} \simeq \text{Im}\,F^{\star}_{\boldsymbol{v}}$. The basic counterpart of a form $\boldsymbol{\alpha} = \alpha(\wedge^{\bullet}\boldsymbol{d}\phi;\phi) \in \Omega^{\bullet}(\Phi)$ is built as follows: Consider first its formal functional analog on the base space $\bar{\boldsymbol{\alpha}} = \alpha(\wedge^{\bullet}\boldsymbol{d}[\phi];[\phi]) \in \Omega^{\bullet}(\mathcal{M})$, and then define the *dressing* of $\boldsymbol{\alpha}$ by

$$\boldsymbol{\alpha}^{\boldsymbol{v}} := F^{\star}_{\boldsymbol{v}}\bar{\boldsymbol{\alpha}} = \alpha(\wedge^{\bullet}F^{\star}_{\boldsymbol{v}}\boldsymbol{d}[\phi];F_{\boldsymbol{v}}(\phi)) \quad \in \ \Omega^{\bullet}_{\text{basic}}(\Phi). \tag{102}$$

It is basic by construction, so it has trivial gauge transformation: $(\boldsymbol{\alpha}^{\boldsymbol{v}})^{\boldsymbol{\psi}} = \boldsymbol{\alpha}^{\boldsymbol{v}}$ for $\boldsymbol{\psi} \in \mathbf{Diff}(I) \simeq \mathbf{Aut}_{v}(\Phi)$. Its concrete form depends on the expression of $F^{\star}_{\boldsymbol{v}}\boldsymbol{d}[\phi]$, the dressing of $\boldsymbol{d}\phi$, and a basis for basic forms, in terms of $\boldsymbol{d}\phi$ and $\boldsymbol{v}$. It may be obtained via the pullback/pushforward duality computing $F_{\boldsymbol{v}\star} : T_{\phi}\Phi \to T_{F_{\boldsymbol{v}}(\phi)}\mathcal{M}$, $\mathfrak{X}_{|\phi} \mapsto F_{\boldsymbol{v}\star}\mathfrak{X}_{|\phi}$, for which we direct the reader to Ref. [2]. The result is

$$\boldsymbol{d}\phi^{\boldsymbol{v}} := F^{\star}_{\boldsymbol{v}}\boldsymbol{d}[\phi] = \boldsymbol{v}^{*}(\boldsymbol{d}\phi + \mathfrak{L}_{\boldsymbol{d}\boldsymbol{v}\circ\boldsymbol{v}^{-1}}\phi) \in \Omega^{1}_{\text{basic}}(\Phi). \tag{103}$$

The dressing of $\boldsymbol{\alpha}$ may then be written as

$$\boldsymbol{\alpha}^{\boldsymbol{v}} = \alpha(\wedge^{\bullet}\boldsymbol{d}\phi^{\boldsymbol{v}};\phi^{\boldsymbol{v}}) \in \Omega^{\bullet}_{\text{basic}}(\Phi). \tag{104}$$

One may notice from the formal similarity between the action of vertical automorphism $\Xi(\phi) = \boldsymbol{\psi}(\phi)^{*}\phi$ and of the dressing operation $F_{\boldsymbol{v}}(\phi) = \boldsymbol{v}(\phi)^{*}\phi$ follows the analog expressions for $\boldsymbol{d}\phi^{\boldsymbol{\psi}}$ (38) and $\boldsymbol{d}\phi^{\boldsymbol{v}}$ (103), and thus for $\boldsymbol{\alpha}^{\boldsymbol{\psi}}$ (20) and $\boldsymbol{\alpha}^{\boldsymbol{v}}$ [Eqs. (102)–(104)]. This grounds the DFM "rule of thumb" to obtain the dressing of a form $\boldsymbol{\alpha}$ on Φ: First, compute its gauge transformation $\boldsymbol{\alpha}^{\boldsymbol{\psi}}$, then substitute $\boldsymbol{\psi} \to \boldsymbol{v}$ in the resulting expression to obtain $\boldsymbol{\alpha}^{\boldsymbol{v}}$. We shall make systematic use of this rule. It should be stressed, however, that despite this formal resemblance, dressings are not gauge transformations (and thus not gauge fixings), since a dressing field $\boldsymbol{v}$ is manifestly not an element of the gauge group $\mathbf{Diff}(I)$, and $F_{\boldsymbol{v}}$ is clearly not a vertical automorphism of Φ.

Remark that a dressed (basic) form $\boldsymbol{\alpha}^{\boldsymbol{v}}$ on Φ can be seen as a form on the space of dressed fields $\Phi^{\boldsymbol{v}}$. So when acting on them, the exterior derivative can, by Eq. (103), be written as $\boldsymbol{d} = \boldsymbol{d}\phi^{\boldsymbol{v}}\frac{\delta}{\delta\phi^{\boldsymbol{v}}} = \boldsymbol{d}x^{\boldsymbol{v}}\frac{\delta}{\delta x^{\boldsymbol{v}}} + \boldsymbol{d}t^{\boldsymbol{v}}\frac{\delta}{\delta t^{\boldsymbol{v}}}$. This is just a manifestation of its naturality $[\boldsymbol{d}, F^{\star}_{\boldsymbol{v}}] = 0$, and the fact that it is a covariant derivative for basic forms.

A dressed form (104) is a relational representation on Φ of a form $\tilde{\boldsymbol{\alpha}} = \alpha(\wedge^{\bullet}\boldsymbol{d}\gamma;\gamma) \in \Omega^{\bullet}(\mathcal{P}(\mathscr{C}))$ on the space of physical kinematical histories $\mathcal{P}(\mathscr{C}) \simeq \mathcal{M}$: in particular, the variational principle of mechanics involves exact forms in $\Omega^{1}(\mathcal{P}(\mathscr{C}))$, and we have $\boldsymbol{d}\phi^{\boldsymbol{v}} \simeq \boldsymbol{d}\gamma$, the variational operator being the "dressed" version of $\boldsymbol{d}$ just mentioned. As noted below Fig. 1, the latter is distinct from a variational principle on the space of bare fields Φ, which involves exact forms in $\Omega^{1}(\Phi)$, and whose variational operator is the "bare" $\boldsymbol{d} = \boldsymbol{d}\phi\frac{\delta}{\delta\phi}$. This stresses again a theme of this paper, i.e., that dressed, relational quantities and operations are the ones that are "standard" in textbook mechanics, so that the latter are disanalogous to their counterparts on fields space Φ, which are the ones typically used in gRGFT (thus in MFT): closer attention should be paid to these conceptual and technical disanalogies.

1. Dressed regions and integrals

Dressed forms are defined above via $\text{Im}F^{\star}_{\boldsymbol{v}} \simeq \text{Im}\,\pi^{\star}$, i.e., as basic on Φ. One similarly defines dressed integrals as being basic on $\Phi \times \boldsymbol{i}(I)$, i.e., via $\text{Im}\,\bar{\pi}^{\star}$ with $\bar{\pi} : \Phi \times \boldsymbol{i}(I) \to \mathcal{R}(I)$ and $\mathcal{R}(I)$ the associated bundle of regions of I defined by Eq. (46). The projection $\bar{\pi}$ is realized as

$$\begin{aligned} &\bar{F}_{\boldsymbol{u}} : \Phi \times \boldsymbol{i}(I) \to \mathcal{R}(I) \simeq \Phi^{\boldsymbol{v}} \times \text{Im}\boldsymbol{v}^{-1}, \\ &\qquad (\phi, i) \mapsto \bar{F}_{\boldsymbol{v}}(\phi, i) := (F_{\boldsymbol{v}}(\phi), \boldsymbol{v}^{-1}(i)) = (\phi^{\boldsymbol{v}}, \boldsymbol{i}^{\boldsymbol{v}}). \end{aligned} \tag{105}$$

Remark that a *dressed interval* $i^{\boldsymbol{v}} := \boldsymbol{v}^{-1}(i)$ is a map $i^{\boldsymbol{v}} : \Phi \times \boldsymbol{i}(I) \to \mathrm{Im}\boldsymbol{v}^{-1}$, $(\phi, i) \mapsto i^{\boldsymbol{v}(\phi)}$, so that for $\psi \in \mathrm{Diff}(I)$:

$$(i^{\boldsymbol{v}})^{\psi} := \bar{R}^{\star}_{\psi}\, i^{\boldsymbol{v}} = i^{\boldsymbol{v}} \circ \bar{R}_{\psi} = (R^{\star}_{\psi}\boldsymbol{v})^{-1} \circ \psi^{-1}(i) = (\psi^{-1} \circ \boldsymbol{v})^{-1} \circ \psi^{-1}(i) = \boldsymbol{v}^{-1}(i) =: i^{\boldsymbol{v}}, \quad (106)$$

where the action $\bar{R}_{\psi}$ on $\Phi \times \boldsymbol{i}(I)$ is defined by Eq. (45)—similarly for $\boldsymbol{\psi} \in \mathbf{Diff}(I) \simeq \mathbf{Aut}_v(\Phi)$, so that $(i^{\boldsymbol{v}})^{\boldsymbol{\psi}} = i^{\boldsymbol{v}}$. In particular, a *dressed point* is also written via the invariant evaluation operation (53): $\tau^{\boldsymbol{v}} := \boldsymbol{v}^{-1}(\tau) = \mathsf{ev}(\boldsymbol{v}^{-1}, \tau)$.

In Sec. III B, it was established that by the $\mathrm{Diff}(I)$ covariance of MFT, and by conjunction of the hole and the point-coincidence arguments, physical time is defined via the mechanical fields ϕ themselves in a $\mathrm{Diff}(I)$-invariant relational way. This relational notion of physical time, which we denoted by Time, is only tacit in MFT but made explicit via the DFM: $i^{\boldsymbol{v}}$ is a formal implementation of such a ϕ-dependent $\mathrm{Diff}(I)$-invariant interval of Time, on which relationally defined and $\mathrm{Diff}(I)$-invariant fields $\phi^{\boldsymbol{v}} := \boldsymbol{v}^{*}\phi$ "live," and may then be integrated over [73]. In particular, it is clear that the (zero-dimensional) boundary of a Time interval $\partial(i^{\boldsymbol{v}})$ is $\mathrm{Diff}(I)$-invariant, so that as advertized in Sec. III B and made manifest via the DFM [54], there is no grip for a "boundary problem."

Next, one defines the dressing operation on the space $\Omega^{\bullet}(\Phi, \Omega^1(i)) \times \boldsymbol{i}(I)$ by

$$\begin{aligned} \tilde{F}_{\boldsymbol{v}} : \Omega^{\bullet}(\Phi, \Omega^1(i)) \times \boldsymbol{i}(I) &\to \Omega^{\bullet}_{\mathrm{basic}}(\Phi, \Omega^1(\mathrm{Im}\boldsymbol{v}^{-1})) \times \mathrm{Im}\boldsymbol{v}^{-1}, \\ (\boldsymbol{\alpha}, i) &\mapsto \tilde{F}_{\boldsymbol{v}}(\boldsymbol{\alpha}, i) := (F^{\star}_{\boldsymbol{v}}\boldsymbol{\alpha}, \boldsymbol{v}^{-1}(i)) = (\boldsymbol{\alpha}^{\boldsymbol{v}}, i^{\boldsymbol{v}}). \end{aligned} \quad (107)$$

Then, by the DFM rule of thumb, using Eq. (55), the dressing of an integral $\boldsymbol{\alpha}_i := \langle \boldsymbol{\alpha}, i\rangle = \int_i \boldsymbol{\alpha}$ is

$$(\boldsymbol{\alpha}_i)^{\boldsymbol{v}} := \langle\ ,\ \rangle \circ \tilde{F}_{\boldsymbol{v}}(\boldsymbol{\alpha}, i) = \langle \boldsymbol{\alpha}^{\boldsymbol{v}}, i^{\boldsymbol{v}}\rangle = \int_{i^{\boldsymbol{v}}} \boldsymbol{\alpha}^{\boldsymbol{v}}. \quad (108)$$

We may then also write it as $(\boldsymbol{\alpha}^{\boldsymbol{v}})_{i^{\boldsymbol{v}}}$. It must be taken into account that the action of $\boldsymbol{d}$ on a dressed integral will now affect the dressed, ϕ-dependent, region $i^{\boldsymbol{v}}$: We have the analog of Eq. (56),

$$\boldsymbol{d}\big(\boldsymbol{\alpha}_i{}^{\boldsymbol{v}}\big) = (\boldsymbol{d}\boldsymbol{\alpha}_i)^{\boldsymbol{v}} - \langle \mathfrak{L}_{\boldsymbol{v}_*^{-1}\boldsymbol{d}\boldsymbol{v}}\, \boldsymbol{\alpha}^{\boldsymbol{v}}, i^{\boldsymbol{v}}\rangle. \quad (109)$$

This result, $[\tilde{F}^{\star}_{\boldsymbol{v}}, \boldsymbol{d}] \neq 0$, stems from the fact that $\boldsymbol{d}$ is not a natural operator on $\Phi \times \boldsymbol{i}(I)$, and implies that the $\mathrm{Diff}(I)$ invariance of a dressed integral is not in general preserved by the action of $\boldsymbol{d}$. However, the commutator yields a boundary term, $[\tilde{F}^{\star}_{\boldsymbol{v}}, \boldsymbol{d}] = \langle \iota_{\boldsymbol{v}_*^{-1}\boldsymbol{d}\boldsymbol{v}}\, \boldsymbol{\alpha}^{\boldsymbol{v}}, \partial i^{\boldsymbol{v}}\rangle$, a key fact to get a well-behaved *relational variational principle*.

Now, for $\boldsymbol{\alpha} \in \Omega^{\bullet}_{\mathrm{tens}}(\Phi, \Omega^1(i))$ one has

$$(\boldsymbol{\alpha}_i)^{\boldsymbol{v}} = \langle \boldsymbol{\alpha}^{\boldsymbol{v}}, i^{\boldsymbol{v}}\rangle = \langle \boldsymbol{v}^{*}\boldsymbol{\alpha}, i^{\boldsymbol{v}}\rangle = \langle \boldsymbol{\alpha}, i\rangle = \boldsymbol{\alpha}_i, \quad (110)$$

by the invariance property (50) of the integration pairing. Which means that, as one might expect, invariant bare "I integrals" (of tensorial integrand) are numerically equal to their dressed (physical) counterparts "time integrals." For such integrals we have thus, $\boldsymbol{d}\boldsymbol{\alpha}_i = \langle \boldsymbol{d}\boldsymbol{\alpha}, i\rangle = \boldsymbol{d}(\boldsymbol{\alpha}_i)^{\boldsymbol{v}} = \boldsymbol{d}\langle \boldsymbol{v}^{*}\boldsymbol{\alpha}, i^{\boldsymbol{v}}\rangle$. This, combined with Eq. (109) (specialized for a tensorial $\boldsymbol{\alpha}$, so that $\boldsymbol{\alpha}^{\boldsymbol{v}} = \boldsymbol{v}^{*}\boldsymbol{\alpha}$) yields the dressed analog of Eq. (61):

$$\langle \boldsymbol{d}\boldsymbol{\alpha}, i\rangle^{\boldsymbol{v}} = \langle \boldsymbol{d}\boldsymbol{\alpha}, i\rangle + \langle \mathfrak{L}_{\boldsymbol{d}\boldsymbol{v}\circ\boldsymbol{v}^{-1}}\boldsymbol{\alpha}, i\rangle. \quad (111)$$

This too is key to the relational variational principle we discuss next in Sec. IV B.

2. Residual transformations of the second kind

If a dressing field is defined for only a normal subgroup $\mathrm{Diff}(I)_0 \subset \mathrm{Diff}(I)$, then one should expect dressed fields $\phi^{\boldsymbol{v}}$ and dressed forms $\alpha^{\boldsymbol{v}}$ to display transformations under the residual group $\mathrm{Diff}(I)_{\mathrm{r}} := \mathrm{Diff}(I)/\mathrm{Diff}(I)_0$—idem for dressed integrals. These are usually called residual transformations of the first kind in the DFM [2]. For example, one may take $\mathrm{Diff}(I)_0 = \mathrm{Diff}(I)_{\mathrm{c}}$ the subgroup of diffeomorphisms with compact support, involved in the hole argument. But we shall not pursue this further here, but rather focus on another type of residual transformations.

Given the definition (97), two dressing fields may be related by the action of a smooth invertible map on their source space, that is, there is *a priori* a right action of $\mathrm{Diff}(J)$:

$$\mathcal{D}r[J,I] \times \mathrm{Diff}(J) \to \mathcal{D}r[J,I], \quad (\boldsymbol{v},\varphi) \mapsto \boldsymbol{v}\circ\varphi = \varphi^*\boldsymbol{v} =: \boldsymbol{v}^\varphi. \tag{112}$$

The group $\mathrm{Diff}(J)$ then parametrizes the "ambiguity" in the choice of the dressing field: This we call the group of residual transformations of the second kind [2].

If it does *not* act on Φ, which we write $\phi^\varphi = \phi$, then its action on dressed fields is

$$\begin{aligned}&\Phi^{\boldsymbol{v}} \times \mathrm{Diff}(J) \to \Phi^{\boldsymbol{v}},\\ &\qquad (\phi^{\boldsymbol{v}},\varphi) \mapsto (\phi^{\boldsymbol{v}})^\varphi := (\boldsymbol{v}^\varphi)^*\phi = (\boldsymbol{v}\circ\varphi)^*\phi = \varphi^*(\boldsymbol{v}^*\phi) = \varphi^*\phi^{\boldsymbol{v}}.\end{aligned} \tag{113}$$

The space of dressed fields would then be *a priori* a $\mathrm{Diff}(J)$ bundle, $\Phi^{\boldsymbol{v}} \xrightarrow{\pi} \Phi^{\boldsymbol{v}}/\mathrm{Diff}(J) =: \mathcal{M}^{\boldsymbol{u}}$, with SES

$$\mathbf{Diff}(J) \simeq \mathbf{Aut}_v(\Phi^{\boldsymbol{v}}) \to \mathbf{Aut}(\Phi^{\boldsymbol{v}}) \to \mathbf{Diff}(\mathcal{M}^{\boldsymbol{v}}), \tag{114}$$

where $\mathbf{Diff}(J)$ is the gauge group of $\Phi^{\boldsymbol{v}}$, acting on a dressed form $\boldsymbol{\alpha}^{\boldsymbol{v}} = \alpha(\wedge^\bullet \boldsymbol{d}\phi^{\boldsymbol{v}};\phi^{\boldsymbol{v}}) \in \Omega^\bullet(\Phi^{\boldsymbol{v}})$ as

$$(\boldsymbol{\alpha}^{\boldsymbol{v}})^{\boldsymbol{\varphi}} = \alpha(\wedge^\bullet(\boldsymbol{d}\phi^{\boldsymbol{v}})^{\boldsymbol{\varphi}};\, (\phi^{\boldsymbol{v}})^{\boldsymbol{\varphi}}), \tag{115}$$

in exact analogy with the action [Eqs. (20) and (38)] of the gauge group $\mathbf{Diff}(I)$ on a bare form $\boldsymbol{\alpha}$.

Since $(\phi^{\boldsymbol{v}})^\varphi$ is $\mathrm{Diff}(I)$-invariant for all $\varphi \in \mathrm{Diff}(J)$, all representatives in the $\mathrm{Diff}(J)$-orbit $\mathcal{O}_{\mathrm{Diff}(J)}[\phi^{\boldsymbol{v}}]$ of $\phi^{\boldsymbol{v}}$ are valid coordinatizations of $[\phi] \in \mathcal{M}$. So, *a priori* $\mathcal{O}_{\mathrm{Diff}(J)}[\phi^{\boldsymbol{v}}] \simeq \mathcal{O}_{\mathrm{Diff}(I)}[\phi]$ and $\mathcal{M}^{\boldsymbol{v}} \simeq \mathcal{M}$. Such a situation, where little seems to be gained by dressing since $\mathbf{Diff}(J)$ replaces the eliminated $\mathbf{Diff}(I)$, obtains notably (but not only) for ϕ-*independent* dressing fields v, or *ad hoc* dressing fields, introduced by *fiat* in a theory as new d.o.f. (thereby creating a *distinct* theory). We direct the reader to the discussion in Sec. 5.2.5 of Ref. [2] for more on this point. In concrete and favorable situations, the constructive process yielding a ϕ-*dependent* dressing field $\boldsymbol{v}(\phi)$ from the fields ϕ of the theory may be such that the arbitrariness reflected by Eq. (112) is parametrized by only a discrete subgroup of $\mathrm{Diff}(J)$—e.g., just counting the restricted options for candidates dressing fields presented by the list of fields ϕ—or even by the trivial group (implying the uniqueness of the dressing field).

But there is another important case, overlooked in earlier presentations of the DFM and yet, as it turns out, essential here—and important in gRGFT more generally (e.g., when the DFM reproduces "scalar coordinatizations" of GR): The case when $\mathrm{Diff}(J)$ acts on Φ, typically because one of the fields in the collection $\phi = \{\phi_0, \ldots, \phi_N\}$ is itself the dressing field. Then, $\phi^\varphi \neq \phi$, and there is no guarantee in general that $(\phi^{\boldsymbol{v}})^\varphi = \varphi^*\phi^{\boldsymbol{v}}$. Transformations (115) still hold, just with $(\phi^{\boldsymbol{v}})^\varphi$ computed from the specifics of the situation at hands rather that defined by Eq. (113). For example, if the dressing $\boldsymbol{v}(\phi) = \boldsymbol{v}(\phi_i)$ is built from a field $\phi_i : I \to J \in \phi$ so that

$$\begin{aligned}&\phi_j^\varphi = \phi_j, \quad \text{for } j \neq i \quad \text{and} \quad \phi_i^\varphi = \varphi^{-1}\circ\phi_i,\\ &\text{then} \quad \left(\phi_j^{\boldsymbol{v}}\right)^\varphi = \boldsymbol{v}^*\phi_j^{\boldsymbol{v}}, \quad \text{for } j \neq i \quad \text{and} \quad \left(\phi_i^{\boldsymbol{v}}\right)^\varphi = \varphi^{-1}\circ\phi_i^{\boldsymbol{v}}\circ\varphi.\end{aligned} \tag{116}$$

In either case, $(\phi^{\boldsymbol{v}})^\varphi = \varphi^*\phi^{\boldsymbol{v}}$ or $(\phi^{\boldsymbol{v}})^\varphi \neq \varphi^*\phi^{\boldsymbol{v}}$, $\mathrm{Diff}(J)$ acts on dressed integrals $\langle\boldsymbol{\alpha}^{\boldsymbol{v}}, i^{\boldsymbol{v}}\rangle$ as

$$\langle\boldsymbol{\alpha}^{\boldsymbol{v}}, i^{\boldsymbol{v}}\rangle^{\boldsymbol{\varphi}} := \int_{\boldsymbol{\varphi}^{-1}(i^{\boldsymbol{v}})} (\boldsymbol{\alpha}^{\boldsymbol{v}})^{\boldsymbol{\varphi}}, \tag{117}$$

in analogy with the action (55) of the gauge group $\mathrm{Diff}(I)$ on bare integrals $\boldsymbol{\alpha}_i = \langle\boldsymbol{\alpha}, i\rangle$. But in the case $(\phi^{\boldsymbol{v}})^\varphi \neq \varphi^*\phi^{\boldsymbol{v}}$, the dressed objects $\boldsymbol{\alpha}^{\boldsymbol{v}}$ do not *a priori* transform under $\mathrm{Diff}(J)$ in a way analogous to bare quantities $\boldsymbol{\alpha}$ transforming under $\mathrm{Diff}(I)$. This means that the residual transformations of the second kind can carry a physical meaning that the original $\mathrm{Diff}(I)$ transformations did not have. Indeed, covariance under $\mathrm{Diff}(J)$ is not automatic, but may hold for some subgroup(s)—

perhaps trivial—revealing nontrivial physical features of the theory: As they typically encode *frame transformations*, requiring invariance/covariance distinguishes a special class of frames.

B. Basic classical mechanics

We now apply the DFM to obtain the basic, i.e., manifestly invariant and relational, version of an MFT. First, naturally we write the dressed action integral

$$S^{\boldsymbol{v}} := \langle L^{\boldsymbol{v}}, i^{\boldsymbol{v}} \rangle = \int_{i^{\boldsymbol{v}}} L^{\boldsymbol{v}} = \int_{\boldsymbol{v}^{-1}(i)} \boldsymbol{v}^* L, \tag{118}$$

involving the dressed Lagrangian $L^{\boldsymbol{v}}(\phi) = \boldsymbol{v}^* L(\phi) = L(\phi^{\boldsymbol{v}})$, i.e., the Lagrangian expressed in terms of the dressed fields $\phi^{\boldsymbol{v}}$, which, as observed earlier, "live on" (are parametrized by) the physical Time interval $i^{\boldsymbol{v}}$.

Since $L \in \Omega_{\text{tens}}(\Phi, \Omega^1(I))$, we have that $S^{\boldsymbol{v}} = S$ as a special case of Eq. (110), meaning that the bare (I-integral) action is numerically equal to the dressed physical (time integral) action. It is then tempting to think the variational principle remains unchanged, as $\boldsymbol{d}S = \boldsymbol{d}(S^{\boldsymbol{v}})$. But we should remind that $[\tilde{F}^{\star}_{\boldsymbol{v}}, \boldsymbol{d}] \neq 0$ by Eq. (109) and stress that $\boldsymbol{d}(S^{\boldsymbol{v}})$ would not be $\mathrm{Diff}(I)$-invariant. To get an invariant, relational variational principle, we must correct the bare one, as indicated by Eq. (111), as

$$(\boldsymbol{d}S)^{\boldsymbol{v}} = \boldsymbol{d}S + \int_i \mathfrak{L}_{\boldsymbol{d}\boldsymbol{v}\circ\boldsymbol{v}^{-1}} L = \boldsymbol{d}S + \int_{\partial i} \iota_{\boldsymbol{d}\boldsymbol{v}\circ\boldsymbol{v}^{-1}} L. \tag{119}$$

This indicates that bare and dressed variational principles lead to equations of motion with the same functional form, which we can flesh out right away. By Eq. (108), and by definition of the bare variational principle (67), we have

$$(\boldsymbol{d}S)^{\boldsymbol{v}} := \int_{i^{\boldsymbol{v}}} (\boldsymbol{d}L)^{\boldsymbol{v}} = \int_{i^{\boldsymbol{v}}} \boldsymbol{E}^{\boldsymbol{v}} + d(\boldsymbol{\theta}^{\boldsymbol{v}}), \tag{120}$$

where $\boldsymbol{E}^{\boldsymbol{v}} = E(\boldsymbol{d}\phi^{\boldsymbol{v}}; \phi^{\boldsymbol{v}}) \in \Omega^1_{\text{basic}}(\Phi)$ are the dressed equation of motion and $\boldsymbol{\theta}^{\boldsymbol{v}} = \theta(\boldsymbol{d}\phi^{\boldsymbol{v}}; \phi^{\boldsymbol{v}}) \in \Omega^1_{\text{basic}}(\Phi)$ is the dressed symplectic potential. By the DFM rule of thumb, using their gauge transformations (76) we find their expressions in terms of their bare counterparts,

$$\boldsymbol{E}^{\boldsymbol{v}} = \boldsymbol{v}^* \boldsymbol{E} \quad \text{and} \quad \boldsymbol{\theta}^{\boldsymbol{v}} = \boldsymbol{v}^*(\boldsymbol{\theta} + \iota_{\boldsymbol{d}\boldsymbol{v}\circ\boldsymbol{v}^{-1}} L). \tag{121}$$

The relational equations of motion $\boldsymbol{E}^{\boldsymbol{v}}$ being $\mathbf{Diff}(I)$-invariant, and manifestly implementing the point-coincidence argument, they are immune to the hole argument (both discussed in Sec. III B) and have thus a well-posed Cauchy problem. The space of dressed/relational solutions $\mathcal{S}^{\boldsymbol{v}} := \{\phi^{\boldsymbol{v}} \in \Phi^{\boldsymbol{v}} \mid \boldsymbol{E}^{\boldsymbol{v}} = 0\}$ is thus a coordinatization of the base space $\mathcal{M}_{\mathcal{S}}$ of the bundle of bare solutions $\mathcal{S} \to \mathcal{M}_{\mathcal{S}}$, which—as discussed below Fig. 1—is itself isomorphic to the space $\mathcal{P}_c(\mathscr{C})$ of physical dynamical histories (critical curves) in configuration spacetime $\mathscr{C}$—which, in turn, projects to the space $\mathcal{P}_c(Q)$ of critical curves in the configuration space Q: we have $\mathcal{S}^{\boldsymbol{v}} \simeq \mathcal{M}_{\mathcal{S}} \simeq \mathcal{P}_c(\mathscr{C}) \to \mathcal{P}_c(Q)$ and $\phi^{\boldsymbol{v}} \simeq [\phi] \simeq \gamma^c \to \gamma^c_q$.

Assessment of the presence and meaning of residual transformations of the second kind cannot be made in general, beyond what was already said in Sec. IV A 2. But next, we shall flesh out the case of non-relativistic (NR) MFT, where indeed they will show to relate to a notion of clock change and allows to single out a class of "good" clocks.

1. Dressed nonrelativistic mechanics

Section III C started with considerations on the bare kinematics; we shall then start here with the dressed kinematics. First, let us denote by $d\bar{t}$ the basis 1-form of $\mathrm{Im}(\boldsymbol{v}^{-1})$ ($\subset J$ *a priori*) and $\partial_{\bar{t}}$ the dual vector basis, so that $\iota_{\partial_{\bar{t}}} d\bar{t} = 1$ and the exterior derivative on dressed fields is $d = d\bar{t}\,\partial_{\bar{t}}$. We have first

$$\boldsymbol{v}^* d\phi = d\boldsymbol{v}^*\phi = d\phi^{\boldsymbol{v}} = (dx^{\boldsymbol{v}},\ dt^{\boldsymbol{v}}) = d\bar{t}\,\partial_{\bar{t}}\,\phi^{\boldsymbol{v}} = d\bar{t}\,(\partial_{\bar{t}}\,x^{\boldsymbol{v}},\ \partial_{\bar{t}}\,t^{\boldsymbol{v}}). \tag{122}$$

So, analogous to Eq. (83), we have

$$\begin{aligned}\partial_{t^{\boldsymbol{v}}} = \partial_{\boldsymbol{v}^* t} &:= [\partial_{\bar{t}}\, t^{\boldsymbol{v}}]^{-1} \partial_{\bar{t}} = (\dot{t} \circ \boldsymbol{v})^{-1} (\partial_{\bar{t}} \boldsymbol{v})^{-1} \partial_\tau \\ &= (\dot{t} \circ \boldsymbol{v})^{-1} [\partial_\tau (\boldsymbol{v}^{-1}) \circ \boldsymbol{v}] \partial_\tau = (\dot{t} \circ \boldsymbol{v})^{-1} [(\boldsymbol{v}^{-1})_* \partial_\tau \circ \boldsymbol{v}] = (\boldsymbol{v}^{-1})_* \partial_t \circ \boldsymbol{v}. \end{aligned} \tag{123}$$

The result of the first line ensures that $\iota_{\partial_{t^{\boldsymbol{v}}}} d\, t^{\boldsymbol{v}} = 1$, that of the second allows to cross-check using Eq. (83) the $\mathrm{Diff}(I)$ invariance of $\partial_{t^{\boldsymbol{v}}}$—which is first manifest from that of $t^{\boldsymbol{v}}$. The dressed velocity and acceleration are then

$$\begin{aligned} v^{\boldsymbol{v}} := \boldsymbol{v}^* v = \boldsymbol{v}^* \big(\mathfrak{L}_{\partial_t} x\big) &= \mathfrak{L}_{(\boldsymbol{v}^{-1}{}_* \partial_t \circ \boldsymbol{v})} (\boldsymbol{v}^* x) = \mathfrak{L}_{\partial_{t^{\boldsymbol{v}}}} x^{\boldsymbol{v}} = \partial_{t^{\boldsymbol{v}}} x^{\boldsymbol{v}} \\ &= \frac{\partial_{\bar{t}}\, x^{\boldsymbol{v}}}{\partial_{\bar{t}}\, t^{\boldsymbol{v}}} = \frac{\dot{x} \circ \boldsymbol{v}}{\dot{t} \circ \boldsymbol{v}} = v \circ \boldsymbol{v}, \\ a^{\boldsymbol{v}} := \boldsymbol{v}^* a = \boldsymbol{v}^* \big(\mathfrak{L}_{\partial_t} v\big) &= \mathfrak{L}_{(\boldsymbol{v}^{-1}{}_* \partial_t \circ \boldsymbol{v})} (\boldsymbol{v}^* v) = \mathfrak{L}_{\partial_{t^{\boldsymbol{v}}}} v^{\boldsymbol{v}} = \partial_{t^{\boldsymbol{v}}} v^{\boldsymbol{v}} \\ &= \frac{\partial_{\bar{t}}\, v^{\boldsymbol{v}}}{\partial_{\bar{t}}\, t^{\boldsymbol{v}}} = \frac{\dot{v} \circ \boldsymbol{v}}{\dot{t} \circ \boldsymbol{v}} = a \circ \boldsymbol{v}. \end{aligned} \tag{124}$$

From which follows that $dx^{\boldsymbol{v}} = v^{\boldsymbol{v}}\, dt^{\boldsymbol{v}}$ and $dv^{\boldsymbol{v}} = a^{\boldsymbol{v}}\, dt^{\boldsymbol{v}}$. Let us now consider next the dressed dynamics.

Given the bare Lagrangian (86), the dressed Lagrangian is

$$\begin{aligned} L^{\boldsymbol{v}}(\phi) = \boldsymbol{v}^* L(\phi) = L(\phi^{\boldsymbol{v}}) = L(x^{\boldsymbol{v}}, t^{\boldsymbol{v}}) &= \left(\frac{m}{2} \langle v^{\boldsymbol{v}}, v^{\boldsymbol{v}} \rangle - V(x^{\boldsymbol{v}}, t^{\boldsymbol{v}}) \right) dt^{\boldsymbol{v}} \\ &= \left(\frac{m}{2} \langle \partial_{\bar{t}} x^{\boldsymbol{v}}, \partial_{\bar{t}} x^{\boldsymbol{v}} \rangle\, (\partial_{\bar{t}} t^{\boldsymbol{v}})^{-1} - V(x^{\boldsymbol{v}}, t^{\boldsymbol{v}})\, \partial_{\bar{t}} t^{\boldsymbol{v}} \right) d\bar{t}. \end{aligned} \tag{125}$$

The relational variational principle (120) gives the dressed field equations 1-form:

$$\begin{aligned} \boldsymbol{E}^{\boldsymbol{v}} &= E(\boldsymbol{d}\phi^{\boldsymbol{v}}; \phi^{\boldsymbol{v}}) = E(\boldsymbol{d}x^{\boldsymbol{v}}; x^{\boldsymbol{v}}, t^{\boldsymbol{v}}) + E(\boldsymbol{d}t^{\boldsymbol{v}}; x^{\boldsymbol{v}}, t^{\boldsymbol{v}}) \\ &= -\left\langle d(mv^{\boldsymbol{v}}) + \frac{\delta V^{\boldsymbol{v}}}{\delta x^{\boldsymbol{v}}}\, dt^{\boldsymbol{v}}, \boldsymbol{d}x^{\boldsymbol{v}} \right\rangle + \left[d\left(\frac{m}{2} \langle v^{\boldsymbol{v}}, v^{\boldsymbol{v}} \rangle + V(x^{\boldsymbol{v}}, t^{\boldsymbol{v}}) \right) - \frac{\delta V^{\boldsymbol{v}}}{\delta t^{\boldsymbol{v}}} dt^{\boldsymbol{v}} \right] \boldsymbol{d}t^{\boldsymbol{v}} \\ &=: -\langle d p_{x^{\boldsymbol{v}}} - F^{\boldsymbol{v}} dt^{\boldsymbol{v}}, \boldsymbol{d}x^{\boldsymbol{v}} \rangle - \left[d p_{t^{\boldsymbol{v}}} + \frac{\delta V^{\boldsymbol{v}}}{\delta t^{\boldsymbol{v}}} dt^{\boldsymbol{v}} \right] \boldsymbol{d}t^{\boldsymbol{v}}, \end{aligned} \tag{126}$$

where the dressed conjugate momenta $p_{\phi^{\boldsymbol{v}}} = \boldsymbol{v}^* p_\phi$ can also be denoted by $(p_\phi)^{\boldsymbol{v}}$. The dressed field equations have a functionally identical form as the bare ones [Eqs. (88)–(91)]; thus, as in the bare case, $E(\boldsymbol{d}x^{\boldsymbol{v}}; x^{\boldsymbol{v}}, t^{\boldsymbol{v}}) = 0$ implies $E(\boldsymbol{d}t^{\boldsymbol{v}}; x^{\boldsymbol{v}}, t^{\boldsymbol{v}}) = 0$. By the above dressed kinematics, and Eq. (103), one checks that Eq. (121) holds $\boldsymbol{E}^{\boldsymbol{v}} = E(\boldsymbol{d}\phi^{\boldsymbol{v}}; \phi^{\boldsymbol{v}}) = \boldsymbol{v}^* \boldsymbol{E}$. In particular, $E(\boldsymbol{d}x^{\boldsymbol{v}}; x^{\boldsymbol{v}}, t^{\boldsymbol{v}}) = 0$ yields $0 = (ma^{\boldsymbol{v}} - F^{\boldsymbol{v}})\, dt^{\boldsymbol{v}} = \boldsymbol{v}^*(ma - F)\, \partial_{\bar{t}} t^{\boldsymbol{v}}\, d\bar{t}$. From that same variational principle (120), one finds the dressed presymplectic potential

$$\begin{aligned} \boldsymbol{\theta}^{\boldsymbol{v}} &= \theta(\boldsymbol{d}x^{\boldsymbol{v}}; x^{\boldsymbol{v}}, t^{\boldsymbol{v}}) + \theta(\boldsymbol{d}t^{\boldsymbol{v}}; x^{\boldsymbol{v}}, t^{\boldsymbol{v}}) \\ &= \left[\langle m v^{\boldsymbol{v}}, \boldsymbol{d}x^{\boldsymbol{v}} \rangle - \left(\frac{m}{2} \langle v^{\boldsymbol{v}}, v^{\boldsymbol{v}} \rangle + V(x^{\boldsymbol{v}}, t^{\boldsymbol{v}}) \right) \boldsymbol{d}t^{\boldsymbol{v}} \right] \\ &=: \langle p_{x^{\boldsymbol{v}}}, \boldsymbol{d}x^{\boldsymbol{v}} \rangle + p_{t^{\boldsymbol{v}}} \boldsymbol{d}t^{\boldsymbol{v}}. \end{aligned} \tag{127}$$

Again, by the dressed kinematics above and Eq. (103), it is easy to verify that Eq. (121) holds, i.e., $\boldsymbol{\theta}^{\boldsymbol{v}} = \boldsymbol{v}^*(\boldsymbol{\theta} + \iota_{\boldsymbol{d}\boldsymbol{v} \circ \boldsymbol{v}^{-1}} L)$.

All this shows that the DFM rule of thumb applies, but still only *formally*. Indeed, as things stand the dressing field $\boldsymbol{v}$ is introduced by fiat: It is not constructively built from the existing mechanical

fields $\phi = (x, t)$, but added as a separate d.o.f. thereby extending the MFS Φ to $\Phi' = \Phi + \boldsymbol{v} = \{x, t, \boldsymbol{v}\}$. Such are *ad hoc* dressing fields, as mentioned in Sec. IV A 2 (see Sec. 5.2.5 of Ref. [2] for a discussion). As a matter of fact, the **Diff**(I)-invariant dressed Lagrangian (125) resembles the textbook one, but is not quite it yet. To achieve fleshing out the physics of the dressed formalism, the dressing field must be extracted from Φ.

2. Clock field as dressing field

The first thing to do to either identify or build a ϕ-dependent dressing field (99) is to inspect the (bare) kinematics so as to check if a candidate stands out among the existing fields. In MFT, such a natural candidate is none other than the clock field: Since $t^{\psi} = R_{\psi} t = t \circ \psi$, we have

$$\begin{aligned} \boldsymbol{v}(\phi) = \boldsymbol{v}(x, t) &:= t^{-1} : \mathcal{T} \to I, \\ &\qquad\qquad \bar{t} \mapsto [\boldsymbol{v}(\phi)](\bar{t}) =: \boldsymbol{v}(\bar{t}), \\ (R^{\star}_{\psi} \boldsymbol{v})(\phi) = \boldsymbol{v}(\phi^{\psi}) &:= (t^{\psi})^{-1} = \psi^{-1} \circ t^{-1} = \psi^{-1} \circ \boldsymbol{v}(\phi). \end{aligned} \tag{128}$$

In that case, we have thus $J = \mathcal{T}$ and $\bar{t}$ is a reading of the clock field t. The corresponding dressed fields are

$$\phi^{\boldsymbol{v}} = (x^{\boldsymbol{v}}, t^{\boldsymbol{v}}) = (x \circ t^{-1}, t \circ t^{-1}) = (\bar{x}, \mathrm{id}_{\mathcal{T}}), \tag{129}$$

where $\bar{x} := x \circ t^{-1} : \mathcal{T} \to \mathbb{R}^{3N}$, $\bar{t} \mapsto \bar{x}(\bar{t})$, so that $\phi^{\boldsymbol{v}}(\bar{t}) = (\bar{x}(\bar{t}), \bar{t})$ represents a point p in the configuration spacetime (bundle) $\mathscr{C} \simeq (\mathbb{R}^{3N} \times \mathcal{T})$. It is then clear that the Diff(I)-invariant dressed fields $\phi^{\boldsymbol{v}}$ represent a curve $\gamma \in \mathscr{C}$, and also the graph of the function $\bar{x}$, which is a curve $\gamma_q \in Q \simeq \mathbb{R}^{3N}$.

The dressed kinematics of the previous section correspondingly simplifies somewhat. We get first

$$d\phi^{\boldsymbol{v}} = (dx^{\boldsymbol{v}},\ dt^{\boldsymbol{v}}) = d\bar{t}\,(\partial_{\bar{t}}\, x^{\boldsymbol{v}},\ \partial_{\bar{t}}\, t^{\boldsymbol{v}}) = d\bar{t}\,(\partial_{\bar{t}}\, \bar{x},\ 1) = (d\bar{x},\ d\bar{t}), \tag{130}$$

and the clock vector field (123) reduces to $\partial_{t^{\boldsymbol{v}}} = [\partial_{\bar{t}}\, t^{\boldsymbol{v}}]^{-1} \partial_{\bar{t}} = \partial_{\bar{t}}$. The dressed velocity and accelerations simplify as

$$\begin{aligned} v^{\boldsymbol{v}} = \partial_{t^{\boldsymbol{v}}}\, x^{\boldsymbol{v}} = \partial_{\bar{t}}\, \bar{x} &=: \bar{v} \quad \text{and} \quad a^{\boldsymbol{v}} = \partial_{t^{\boldsymbol{v}}}\, v^{\boldsymbol{v}} = \partial_{\bar{t}}\, \bar{v} =: \bar{a} \\ &= v \circ t^{-1}, \qquad\qquad\qquad = a \circ t^{-1}, \end{aligned} \tag{131}$$

so $d\bar{x} = \bar{v}\, d\bar{t}$ and $d\bar{v} = \bar{a}\, d\bar{t}$. Therefore, as expected, the **Diff**(I)-invariant dressed velocity $v^{\boldsymbol{v}} = \bar{v}$ is the variation of the **Diff**(I)-invariant dressed spatial field $x^{\boldsymbol{v}} = \bar{x}$ measured against the (value set of the) dressed clock field $t^{\boldsymbol{v}} = \mathrm{id}_{\mathcal{T}}$.

The basic basis 1-form (103) is then $\boldsymbol{d}\phi^{\boldsymbol{v}} = (\boldsymbol{d}\bar{x}, 0)$, seeing that $\boldsymbol{d}(\mathrm{id}_{\mathcal{T}}) = 0$, and basic forms (104) are

$$\begin{aligned} &\boldsymbol{\alpha}^{\boldsymbol{v}} = \alpha(\wedge^{\bullet}\boldsymbol{d}\bar{x}\,;\, \bar{x}, \mathrm{id}_{\mathcal{T}}) \quad \in \Omega^0_{\text{basic}}(\Phi, \Omega^1(\mathcal{T})) = \Omega^0(\Phi^{\boldsymbol{v}}, \Omega^1(\mathcal{T})), \\ \text{or} \quad &\boldsymbol{\alpha}^{\boldsymbol{v}} = \alpha(\wedge^{\bullet}\boldsymbol{d}\bar{x}\,;\, \bar{x}(\bar{t}), \bar{t}\,). \end{aligned} \tag{132}$$

The exterior derivative thus acts on them as $\boldsymbol{d} = \boldsymbol{d}\bar{x}\frac{\delta}{\delta\bar{x}}$, reflecting indeed the variational operation $\boldsymbol{d} = \boldsymbol{d}\gamma\frac{\delta}{\delta\gamma}$ on $\mathcal{P}(\mathscr{C})$. The expression (132) highlights that we are now dealing with $\mathcal{T}$ dependent, i.e., clock-time-dependent quantities. Dressed integrals (108) are thus $\mathcal{T}$ integrals: $(\boldsymbol{\alpha}_i)^{\boldsymbol{v}} = \langle \boldsymbol{\alpha}^{\boldsymbol{v}}, \bar{i}\,\rangle$, with $\bar{i} := i^{\boldsymbol{v}} = \boldsymbol{v}^{-1}(i) = t(i) \subset \mathcal{T}$ [74].

The dressed action (118) is thus the standard clock-time integral

$$S^{\boldsymbol{v}} := \langle L^{\boldsymbol{v}}, \bar{i}\,\rangle = \int_{\bar{i}} L(\phi^{\boldsymbol{v}}) = \int_{\bar{i}} L(\bar{x}, \mathrm{id}_{\mathcal{T}}), \tag{133}$$

with the dressed Lagrangian (125)

$$L(\phi^{\boldsymbol{v}}) = L(\bar{x}, \mathrm{id}_{\mathcal{T}}) = \left(\frac{m}{2}\langle \bar{v}, \bar{v}\rangle - V(\bar{x}, \mathrm{id}_{\mathcal{T}})\right) d\bar{t} \quad \in \Omega^0_{\text{basic}}(\Phi, \Omega^1(\mathcal{T})),$$

$$\text{or} \quad L(\bar{x}(\bar{t}), \bar{t}) = \left(\frac{m}{2}\langle \bar{v}, \bar{v}\rangle - V(\bar{x}(\bar{t}), \bar{t})\right) d\bar{t}, \tag{134}$$

being precisely the standard textbook Lagrangian formulation of NR mechanics. The dressed variational principle [Eqs. (119) and (120)], then involving varying $\bar{x}$ via $\boldsymbol{d} = \boldsymbol{d}\bar{x}\frac{\delta}{\delta\bar{x}}$, yields the dressed field equation

$$\begin{aligned} \boldsymbol{E}^{\boldsymbol{v}} = E(\boldsymbol{d}\bar{x}; \bar{x}, \mathrm{id}_{\mathcal{T}}) &= -\left\langle d(m\bar{v}) + \frac{\delta \bar{V}}{\delta \bar{x}} d\bar{t}, \boldsymbol{d}\bar{x}\right\rangle \quad \in \Omega^0_{\text{basic}}(\Phi, \Omega^1(\mathcal{T})) \\ &=: -\langle dp_{\bar{x}} - \bar{F} d\bar{t}, \boldsymbol{d}\bar{x}\rangle, \end{aligned} \tag{135}$$

as a reduction of Eq. (126), which we may also denote by $\boldsymbol{E}^{\boldsymbol{v}} = E(\boldsymbol{d}\bar{x}; \bar{x}(\bar{t}), \bar{t})$. Clearly, $\boldsymbol{E}^{\boldsymbol{v}} = 0$ is just the textbook form of Newton's second law. The space of relational solutions is then $\mathcal{S}^{\boldsymbol{v}} := \{\phi^{\boldsymbol{v}} = (\bar{x}, \mathrm{id}_{\mathcal{T}}) \in \Phi^{\boldsymbol{v}} \mid \boldsymbol{E}^{\boldsymbol{v}} = 0\}$, and the isomorphisms and projection $\mathcal{S}^{\boldsymbol{v}} \simeq \mathcal{M}_{\mathcal{S}} \simeq \mathcal{P}_c(\mathscr{C}) \to \mathcal{P}_c(Q)$ discussed earlier, below Eq. (121), read then explicitly $\phi^{\boldsymbol{v}} = (\bar{x}, \mathrm{id}_{\mathcal{T}}) \simeq [\phi] \simeq \gamma^c \to \gamma^c_q \simeq \bar{x}$. It appears a part of the field equations is lost as $\boldsymbol{d}t^{\boldsymbol{v}} = \boldsymbol{d}\,\mathrm{id}_{\mathcal{T}} = 0$, but as noticed earlier, it is fortunately already a consequence of $E(\boldsymbol{d}x^{\boldsymbol{v}}; x^{\boldsymbol{v}}, t^{\boldsymbol{v}}) = E(\boldsymbol{d}\bar{x}; \bar{x}, \mathrm{id}_{\mathcal{T}}) = 0$ and is just a continuity equation for the nonconservation of $\mathbf{Diff}(I)$-invariant mechanical energy:

$$dp_{\bar{t}} - \frac{\delta V}{\delta \bar{t}} d\bar{t} = d\left(\frac{m}{2}\langle \bar{v}, \bar{v}\rangle + V(\bar{x}, \mathrm{id}_{\mathcal{T}})\right) - \frac{\delta \bar{V}}{\delta \bar{t}} d\bar{t} = 0. \tag{136}$$

So, no information is lost by switching to the dressed/invariant formulation. Likewise, the dressed presymplectic potential is the standard one:

$$\boldsymbol{\theta}^{\boldsymbol{v}} = \theta(\boldsymbol{d}\bar{x}; \bar{x}, \mathrm{id}_{\mathcal{T}}) = \langle p_{\bar{x}}, \boldsymbol{d}\bar{x}\rangle = \langle m\bar{v}, \boldsymbol{d}\bar{x}\rangle \quad \in \Omega^0_{\text{basic}}(\Phi, \Omega^0(\mathcal{T})), \tag{137}$$

as a reduction of Eq. (127), and may be denoted by $\boldsymbol{\theta}^{\boldsymbol{v}} = \theta(\boldsymbol{d}\bar{x}; \bar{x}(\bar{t}), \bar{t})$. It "lives," or is evaluated at, the invariant, physical zero-dimensional boundary $\partial i^{\boldsymbol{v}} = \partial \bar{i} = \{\bar{t}_0, \bar{t}_1\} \in \mathcal{T}$, with $\bar{t}_i := \boldsymbol{v}^{-1}(\tau_i) = t(\tau_i) = \mathsf{ev}(t, \tau_i)$—where the bare (unphysical) boundary is $\partial i = \{\tau_0, \tau_1\}$. Which is just the initial and final clock field readings (setting the boundary conditions $\{\bar{x}(\bar{t}_0), \bar{x}(\bar{t}_1)\}$ for the physical spatial field $\bar{x}$) [75].

Remark on dressing versus gauge fixing. As alluded to in Sec. III C, the bare formulation of NR mechanics in terms of $\phi(\tau) = (x(\tau), t(\tau))$ is often referred to as the "parametrized" formulation, by opposition to the "deparametrized" (or "unparametrized") standard formulation via $x(t)$, which we obtain above as the dressed formulation in terms of $\phi^{\boldsymbol{v}}(\bar{t}) = (\bar{x}(\bar{t}), \bar{t})$. It is almost as often said that one may go from the former to the latter formulation via "gauge fixing"; by which it is meant that the clock field may be required to satisfy the condition $\dot{t} = 1$, heuristically interpreted as identifying t with the parameter τ, so that $x(\tau) = x(t)$.

While such a choice is of course allowed, one should notice that, as stressed in Sec. II A, like any gauge fixing it is *not* $\mathrm{Diff}(I)$-invariant: As if t satisfies $\dot{t} = 1$, $t^{\psi} = t \circ \psi$ would not. One may then consider only the subgroup of $\mathrm{Diff}(I)$ preserving the gauge-fixing condition; but since $\partial_\tau(t^{\psi}) = (\dot{t} \circ \psi)\dot{\psi}$, this subgroup is trivial, $\psi = \mathrm{id}_I$. Meaning that by imposing this condition, we have "broken by hand" the group $\mathrm{Diff}(I)$. As a matter of general principles, it is thus conceptually incorrect to state that the $\mathrm{Diff}(I)$-covariant parametrized (bare) formulation can be "gauge fixed" to yield the $\mathrm{Diff}(I)$-invariant deparametrized (dressed) formulation.

We remark also that the condition lacks precise characterization, both mathematical and physical, if we are to keep a clear conceptual distinction between the source and target spaces of the clock field t—even acknowledging in practice the (non-canonical) isomorphisms $I \simeq \mathbb{R} \simeq \mathcal{T}$. Regarding the physical aspect, we shall revisit it in the next section after discussing the notion of "good" clocks.

Regarding the mathematical aspect, the kernel of truth contained in this condition is that, properly understood, it allows to identify the clock field as dressing field.

Consider indeed the *composite field* $\phi^{\boldsymbol{\upsilon}} := \phi \circ \boldsymbol{\upsilon}$, where $\boldsymbol{\upsilon}$ is a smooth map with target space I (it is not yet said that it is a dressing field). Now, imposing the condition $\frac{\partial}{\partial \bar{t}}(t^{\boldsymbol{\upsilon}}) = 1$, for $\frac{\partial}{\partial \bar{t}}$ the basis of vector fields on the target space $\mathcal{T}$ of t, implies that $\mathcal{T}$ is also the source space of $\boldsymbol{\upsilon}$. So, $\boldsymbol{\upsilon} : \mathcal{T} \to I$ is not an element of $\mathrm{Diff}(I)$, and $t^{\boldsymbol{\upsilon}}$ is not a gauge transform of t but a smooth map on $\mathcal{T}$. The condition—clearly not a gauge fixing—may then be written as

$$\mathscr{C}(\phi^{\boldsymbol{\upsilon}}) := \frac{\partial}{\partial \bar{t}}(t^{\boldsymbol{\upsilon}}) - 1 = 0 \Rightarrow \frac{\partial}{\partial \bar{t}}\,\boldsymbol{\upsilon} - \frac{1}{\dot{t} \circ \boldsymbol{\upsilon}} = 0. \tag{138}$$

Solving for $\boldsymbol{\upsilon}$ in terms of ϕ, one gets $\boldsymbol{\upsilon}(\phi) = t^{-1}$; consequently, one finds that $\boldsymbol{\upsilon}(\phi^{\psi}) = (t^{\psi})^{-1} = \psi^{-1} \circ t^{-1} = \psi^{-1} \circ \boldsymbol{\upsilon}(\phi)$, i.e., $\boldsymbol{\upsilon}(\phi) := t^{-1}$ is a ϕ dependent dressing field [and manifestly not an element of $\mathbf{Diff}(I)$], our starting point of Sec. IV B 2. One has therefore finally that $\phi^{\boldsymbol{\upsilon}} = (x^{\boldsymbol{\upsilon}}, t^{\boldsymbol{\upsilon}}) = (\bar{x}, \mathrm{id}_{\mathcal{T}})$ are $\mathrm{Diff}(I)$-invariant dressed fields, satisfying Eq. (138) by construction, and furthermore *invariantly so*.

We slightly belabor the point so as to highlight the important technical and conceptual distinction between dressing, yielding an invariant formulation, and gauge fixing, which does not. This is a key point of the DFM, and the above circumstance—whereby a "gauge-fixing condition" when solved for the parameter (analog of $\boldsymbol{\upsilon}$) yields a field-dependent dressing field (instead of a field-dependent gauge group element, analog of $\boldsymbol{\psi}$), so that one ends-up building invariant fields instead of gauge-fixed ones—has several echoes in the (gR)GFT literature: It, e.g., is the case of the Coulomb or Lorenz conditions as well as for the "unitary gauge" in the electroweak model [76–78], and instances are found in supersymmetric field theory [3,4].

3. Residual transformations of the second kind: clock change covariance and "good" clocks

In Sec. IV A 2, we have discussed the possible ambiguity in the choice of dressing field, and established that it is parametrized by what we called the group $\mathrm{Diff}(J)$ of "residual transformations of the second kind": $\boldsymbol{\upsilon}^{\varphi} = \boldsymbol{\upsilon} \circ \varphi$ for $\varphi \in \mathrm{Diff}(J)$. Two cases have been distinguished.

The first assumes that $\phi^{\varphi} = \phi$, so that the group of second kind transformations acts on the dressed field simply by pullback (113): $(\phi^{\boldsymbol{\upsilon}})^{\varphi} = \varphi^{*}\phi^{\boldsymbol{\upsilon}}$. If it is so, the whole dressed formulation transforms under $\mathrm{Diff}(J)$ exactly as the bare formulation transforms under $\mathrm{Diff}(I)$.

This typically happens when the dressing field is *ad hoc*, i.e., introduced by hand as separate d.o.f., so that indeed $\phi^{\varphi} = \phi$ follows: But in this case it is rather unclear what is gained by dressing, seeing that one appears to just trade $\mathrm{Diff}(I)$ for $\mathrm{Diff}(J)$. The gain, if any, would seem to rest entirely on some interpretive effort: For example, on the understanding that the $\mathrm{Diff}(I)$ invariance of $\phi^{\boldsymbol{\upsilon}}$ means that the dressed fields are physical d.o.f., one may think that $\mathrm{Diff}(J)$ is a transformation group somehow more directly "physical" than $\mathrm{Diff}(I)$ (which was gauge) [79], and whose direct significance is then tied to its interpretation as a physical operation.

Considering thus the dressing of NR mechanics of Sec. IV B 1, one would have that the dressed Lagrangian (125) and field equations (126) are $\mathrm{Diff}(J)$ covariant. Now, comes an attempt at interpreting: Say one considers J to be the physical timeline, the action of $\mathrm{Diff}(J)$ on the dressed clock $t^{\boldsymbol{\upsilon}}$, $(t^{\boldsymbol{\upsilon}})^{\varphi} = t^{\boldsymbol{\upsilon}} \circ \varphi$, seems to plausibly instantiate a change of clock, which is then implemented on the dressed spatial field by $(x^{\boldsymbol{\upsilon}})^{\varphi} = x^{\boldsymbol{\upsilon}} \circ \varphi$. But then that would mean that NR mechanics [Eqs. (125) and (126)] is covariant under arbitrary change of clocks. This conclusion is incongruent with our usual understanding of classical mechanics.

Alternatively, one may counterargue that in such a case (*ad hoc* dressing field), at best, one has actually simply traded a gauge symmetry [$\mathrm{Diff}(I)$] for another, $\mathrm{Diff}(J)$ [80]. And as a matter of fact, the SES (114), being isomorphic to the SES (6), could be pressed in support of this alternative view—as hinted at in the paragraph following Eq. (114). But then we are back to wondering what is gained by dressing, in an *ad hoc* manner. This discussion highlights the danger of relying on sheer formality and how it can lead to puzzling and/or wrongheaded physical conclusions [81].

As previewed at the end of Sec. IV A 2, the second case whereby $\phi^\varphi \neq \phi$ implies that covariance of the dressed formalism under transformations of the second kind is not automatic, meaning that they may have a distinctive interpretation and potentially encode relevant physical information. This is just the case for the dressed NR mechanics of Sec. IV B 2. There, indeed, the clock field being the dressing field, the group of residual transformations of the second kind is $\mathrm{Diff}(\mathcal{T})$, and acts by definition as $\boldsymbol{v}^\varphi = \varphi^*\boldsymbol{v} = \boldsymbol{v}\circ\varphi$ for $\varphi \in \mathrm{Diff}(\mathcal{T})$, i.e., $t^\varphi = \varphi^{-1}\circ t$. In other words, residual transformations of the second kind are quite clearly *clock changes*: $t \mapsto t' = t^\varphi$. We are indeed in the case described in Eq. (116): The action of $\mathrm{Diff}(\mathcal{T})$ on the bare fields being $\phi^\varphi = (x^\varphi, t^\varphi) = (x, \varphi^{-1}\circ t) \neq \phi$, its action on the dressed fields $\phi^{\boldsymbol{v}} = (x^{\boldsymbol{v}}, t^{\boldsymbol{v}}) = (\bar{x}, \mathrm{id}_{\mathcal{T}})$ is thus

$$(\phi^{\boldsymbol{v}})^\varphi = (\,\bar{x}^\varphi,\ \varphi^{-1}\circ \mathrm{id}_{\mathcal{T}}\circ\varphi) = (\,\varphi^*\bar{x},\ \mathrm{id}_{\mathcal{T}}) \neq \varphi^*\phi^{\boldsymbol{v}}. \tag{139}$$

Defining $\bar{t}' := \varphi(\bar{t}\,)$, a reading (from the value set) of the new clock $t' = t^\varphi$, and $\bar{x}' := \varphi^*\bar{x} = \bar{x}^\varphi$, we then have that $[(\phi^{\boldsymbol{v}})^\varphi](\bar{t}\,) = (\bar{x}'(\bar{t}\,), \bar{t}\,) = (\bar{x}(\bar{t}'), \bar{t}\,)$. This shows that we still keep track of the old clock after the change $t \mapsto t'$, allowing to compare the two. The relation (139) implies that the dressed Lagrangian and field equations are not $\mathrm{Diff}(\mathcal{T})$ covariant:

$$(S^{\boldsymbol{v}})^\varphi = \int_{\boldsymbol{\varphi}^{-1}(\bar{i})} (L^{\boldsymbol{v}})^\varphi \neq \int_{\varphi^{-1}(\bar{i})} \varphi^*(L^{\boldsymbol{v}}) = \int_{\bar{i}} L^{\boldsymbol{v}} = S^{\boldsymbol{v}}, \quad \text{s.t.} \quad (\boldsymbol{E}^{\boldsymbol{v}})^{\boldsymbol{\varphi}} \neq \boldsymbol{\varphi}^*(\boldsymbol{E}^{\boldsymbol{v}}). \tag{140}$$

Meaning that NR mechanics is not covariant under arbitrary clock change, as we expect. Its possible covariance under a subgroup $\mathcal{G}_c$ of $\mathrm{Diff}(\mathcal{T})$ would mean that $\mathcal{G}_c$ defines a distinguished class of clocks: the "$\mathcal{G}$ood clocks."

To ascertain the facts of the matter, one needs only to find the $\mathrm{Diff}(\mathcal{T})$ transformations of the dressed kinematics. But first, for reference, let us take note that by Eq. (134) we have

$$\varphi^*(L^{\boldsymbol{v}}) = \varphi^*\left(\frac{m}{2}\langle\bar{v}, \bar{v}\,\rangle - V(\bar{x}, \mathrm{id}_{\mathcal{T}})\right)\varphi^* d\bar{t} = \left(\frac{m}{2}\langle\bar{v}', \bar{v}'\rangle - V(\bar{x}', \varphi)\right) d\bar{t}', \tag{141}$$

where $\bar{v}' = \bar{v}\circ\varphi$ can be defined via the dual clock vector field $\partial_{\bar{t}'} := (\partial_{\bar{t}}\varphi)^{-1}\partial_{\bar{t}}$ associated with $d\bar{t}' = (\partial_{\bar{t}}\varphi)\ d\bar{t}$, by $\bar{v}' := \mathfrak{L}_{\partial_{\bar{t}'}}\bar{x}' = \partial_{\bar{t}'}\bar{x}' = (\partial_{\bar{t}}\varphi)^{-1}\partial_{\bar{t}}\,(\bar{x}\circ\varphi) = (\partial_{\bar{t}}\varphi)^{-1}\,[(\partial_{\bar{t}}\bar{x}\circ\varphi)\,\partial_{\bar{t}}\varphi] = \bar{v}\circ\varphi$—using Eq. (131) in the last equality—so that $d\bar{x}' = \bar{v}'d\bar{t}'$. Correspondingly, we define $\bar{a}' := \mathfrak{L}_{\partial_{\bar{t}'}}\bar{v}' = \partial_{\bar{t}'}\bar{v}' = (\partial_{\bar{t}}\varphi)^{-1}\partial_{\bar{t}}\,(\bar{v}\circ\varphi) = (\partial_{\bar{t}}\varphi)^{-1}\,[(\partial_{\bar{t}}\bar{v}\circ\varphi)\,\partial_{\bar{t}}\varphi] = \bar{a}\circ\varphi$—using Eq. (131) again—so that $d\bar{v}' = \bar{a}'d\bar{t}'$. Now, by Eq. (139) we have

$$(d\phi^{\boldsymbol{v}})^\varphi := d(\phi^{\boldsymbol{v}})^\varphi = d(\,\varphi^*\bar{x},\ \mathrm{id}_{\mathcal{T}}) = d\bar{t}\,((\partial_{\bar{t}}\,\bar{x}\circ\varphi)\,\partial_{\bar{t}}\,\varphi,\ 1) = (d\bar{x}', d\bar{t}), \tag{142}$$

so that indeed $(d\phi^{\boldsymbol{v}})^\varphi \neq \varphi^* d\phi^{\boldsymbol{v}} = \varphi^*(d\bar{x},\ d\bar{t}\,) = d\bar{t}\,(\,(\partial_{\bar{t}}\,\bar{x}\circ\varphi)\,\partial_{\bar{t}}\,\varphi,\ \partial_{\bar{t}}\,\varphi\,) = (d\bar{x}',\ d\bar{t}')$. Correspondingly, the $\mathrm{Diff}(\mathcal{T})$ transformation of the dressed clock field is indeed found to be

$$(\partial_{t^{\boldsymbol{v}}})^\varphi := \partial_{(t^{\boldsymbol{v}})^\varphi} = [\partial_{\bar{t}}\ (t^{\boldsymbol{v}})^\varphi]^{-1}\partial_{\bar{t}} = \partial_{\bar{t}}. \tag{143}$$

The $\mathrm{Diff}(\mathcal{T})$ transformations of the dressed velocity $\bar{v}$ and dressed acceleration $\bar{a}$ (131) are then

$$\begin{aligned}
\bar{v}^\varphi &:= \mathfrak{L}_{\partial_{(t^{\boldsymbol{v}})^\varphi}}\,\bar{x}^\varphi = \partial_{\bar{t}}\,\bar{x}^\varphi = (\partial_{\bar{t}}\,\bar{x}\circ\varphi)\,\partial_{\bar{t}}\,\varphi = (\bar{v}\circ\varphi)\ \partial_{\bar{t}}\,\varphi = \bar{v}'\ \partial_{\bar{t}}\,\varphi,\\
\bar{a}^\varphi &:= \mathfrak{L}_{\partial_{(t^{\boldsymbol{v}})^\varphi}}\,\bar{v}^\varphi = \partial_{\bar{t}}\,\bar{v}^\varphi = (\bar{a}\circ\varphi)\,(\partial_{\bar{t}}\varphi)^2 + (\bar{v}\circ\varphi)\,\partial_{\bar{t}}^2\varphi = \bar{a}'\,(\partial_{\bar{t}}\,\varphi)^2 + \bar{v}'\,\partial_{\bar{t}}^2\varphi.
\end{aligned} \tag{144}$$

So, we have $d\bar{x}^\varphi = \bar{v}^\varphi\,d\bar{t}$ (which is also equal to $\bar{v}'d\bar{t}' = d\bar{x}'$, as expected from $\bar{x}' := \bar{x}^\varphi$), and $d\bar{v}^\varphi = \bar{a}^\varphi\,d\bar{t}$. From this, we have the $\mathrm{Diff}(\mathcal{T})$ transformation of the dressed Lagrangian (134) is

$$\begin{aligned}
(L^{\boldsymbol{v}})^\varphi := L((\phi^{\boldsymbol{v}})^\varphi) &= \left(\frac{m}{2}\langle\bar{v}', \bar{v}'\rangle\,(\partial_{\bar{t}}\,\varphi)^2 - V(\bar{x}', \mathrm{id}_{\mathcal{T}})\right) d\bar{t}\\
&= \left(\frac{m}{2}\langle\bar{v}', \bar{v}'\rangle\,(\partial_{\bar{t}}\,\varphi) - V(\bar{x}', \mathrm{id}_{\mathcal{T}})\,(\partial_{\bar{t}}\,\varphi)^{-1}\right) d\bar{t}'.
\end{aligned} \tag{145}$$

Comparing Eqs. (145) and (141), one may identify the covariance subgroup $\mathcal{G}_c \subset \mathrm{Diff}(\mathcal{T})$ of the dressed formalism.

The first thing we may notice is that if the potential is explicitly (clock-)time dependent, then the covariance group reduces to the identity $\mathcal{G}_c = \{\mathrm{id}_{\mathcal{T}}\}$: Covariance thus singles out the clock field t as a *unique* dressing field. This echoes the remarks made in Sec. IV A 2, pointing out that the procedure of identification/construction of ϕ-dependent dressing fields may turn out to be s.t. their arbitrariness is parametrized by a subgroup of transformations of the second kind that is discrete or trivial.

When the potential is (clock-)time independent $\bar{V} = V(\bar{x})$, we remark that mechanical energy $p_{\bar{t}} = \frac{m}{2}\langle \bar{v}, \bar{v}\rangle + V(\bar{x})$ is conserved by Eq. (136), and Eqs. (141)–(145) reduce to

$$\varphi^*(L^{\boldsymbol{v}}) = \left(\frac{m}{2}\langle \bar{v}', \bar{v}'\rangle - V(\bar{x}')\right) d\bar{t}' \quad \text{and} \quad (L^{\boldsymbol{v}})^{\varphi} = \left(\frac{m}{2}\langle \bar{v}', \bar{v}'\rangle\,(\partial_{\bar{t}}\,\varphi) - V(\bar{x}')\,(\partial_{\bar{t}}\,\varphi)^{-1}\right) d\bar{t}'. \tag{146}$$

Notice the (dis)similarity with the expression of the bare Lagrangian (86). The covariance group is then

$$\mathcal{G}_c = \{\varphi \in \mathrm{Diff}(\mathcal{T}) \mid \partial_{\bar{t}}\varphi = 1\}. \tag{147}$$

Now, from the defining relation $t' = \varphi^{-1} \circ t$, or $\boldsymbol{v}' = \boldsymbol{v} \circ \varphi$, or equivalently, $t = \varphi(t')$, we have that

$$\partial_{\bar{t}}\varphi = \boldsymbol{v}'^{*}\left(\frac{\dot{t}}{\dot{t}'}\right), \quad \text{s.t.} \quad \partial^2_{\bar{t}}\varphi = \boldsymbol{v}'^{*}((\ddot{t}\,\dot{t}' - \dot{t}\,\ddot{t}')\,(\dot{t}')^{-3}). \tag{148}$$

So, $\partial_{\bar{t}}\varphi$ encodes in a $\mathrm{Diff}(I)$-invariant manner the ratio of distinct clocks' rates, and $\partial^2_{\bar{t}}\varphi$ is the variation of this ratio. Both quantities are observables. It follows that the class of clocks defined by the covariance group $\mathcal{G}_c$ (147), *good clocks*, are those whose relative rates are identical: Solving $\partial_{\bar{t}}\varphi = 1$ yields $\varphi(\bar{t}) = \bar{t} + s$, with s a constant (shift), which translates as the relation among clock fields: $t = \varphi(t') = t' + s$. NR mechanics (for time-independent potentials) is covariant under exchanges of clocks thus related, i.e., it is invariant under "time translations": We thus recover the transformations of the time coordinate given by the Galilean (and Bargmann) group(s) [82].

The $\mathrm{Diff}(\mathcal{T})$ transformation of the field equation 1-form is $(\boldsymbol{E}^{\boldsymbol{v}})^{\varphi} = E(\boldsymbol{d}\bar{x}^{\varphi}; \bar{x}^{\varphi}, \mathrm{id}_{\mathcal{T}}) = \langle (m\bar{a}^{\varphi} - \bar{F}^{\varphi})\,d\bar{t}, \boldsymbol{d}\bar{x}^{\varphi}\rangle$. Then, while in the free case ($\bar{V} = 0 = \bar{F}$) $\boldsymbol{E}^{\boldsymbol{v}} = 0$ yields $m\bar{a} = 0$, by Eq. (144) $(E^{\boldsymbol{v}})^{\varphi} = 0$ yields $m\bar{a}' = m\bar{v}'\partial_{\bar{t}}((\partial_{\bar{t}}\varphi)^{-1})$. Clocks defined by the covariance group $\mathcal{G}_c$ (147) are thus those with which there are no "fictitious/kinematic forces." This is analog to the (secondary) characterization of *inertial frames* as those in which no "fictitious/inertial forces" arise: The good clocks defined by $\mathcal{G}_c$ may then also be called suggestively *inertial clocks* [83].

On the definition of good clocks. In the bare formulation of MFT, we have called t a clock field. But the *rate* $\dot{t}$ of a clock is as important as its readings (its value set), and so does the change $\ddot{t}$ in its rate (and so on). One could say that a clock is (at least) the 2-jet $(t, \dot{t}, \ddot{t})$.

On the intuition expressed in Newton's *Scholium* cited in Sec. III B, according to which "Absolute, true, and mathematical time, of itself, and from its own nature, *flows equably* [...]" (our emphasis), and given an *a priori* understanding of I as representing this "Absolute, true, and mathematical time," one may define a *good clock* as one "keeping Time accurately," i.e., as one whose rate is *stable* (in the metrological sense of the term): Meaning a good clock t is s.t. $(t, \dot{t} = \rho, \ddot{t} = 0)$, with $\rho \neq 0$ constant. The "gauge-fixing" condition mentioned at the end of Sec. IV B 2 could then be interpreted as picking up a good clock: Setting $\rho = 1$ could be understood as specifying a choice of time unit, which identifies I (Newton's time) with the value set $\mathcal{T}$ of a good clock t. Then, any other good clock t' would be so that $(t', \dot{t}' = \rho, \ddot{t}' = 0)$, so that the dimensionless ratio of their rates is $r = \dot{t}/\dot{t}' = 1$.

The problem with this definition of good clocks within the bare formalism, echoing the relational picture of Sec. III B, is that I is unobservable, so how would one operationally verify the condition $\dot{t} = \rho$ in the first place [84]? Relatedly, this definition is in tension with the requirement of $\mathrm{Diff}(I)$ covariance of the bare MFT formalism (or with the notion that it is an important feature) as it

trivializes it: As discussed in Sec. IV B 2, such a definition is obviously not $\mathrm{Diff}(I)$-invariant, it is preserved only by $\psi = \mathrm{id}_I$.

In contrast, the definition of "good clocks" arising from the dressed formalism via the covariance group $\mathcal{G}_c$ (147) is $\mathrm{Diff}(I)$-invariant, and essentially relational—in keeping with, but not identical with, the relational structure of MFT discussed in Sec. III B. Indeed, it does not rely on unobservable quantities: By Eq. (148), the (unobservable) "rates" of any two good clock fields $\dot{t}$ and $\dot{t}'$ can be arbitrary as long as their ratio is one, $\partial_{\bar{t}}\varphi = 1$. This is in line with the actual (metrological) practice, whereby one can never define a good, stable, physical clock in itself, in isolation, but only always as part of a comparative network of clocks whose rates are defined with respect to each other's. In other words, one does not have to (actually cannot) start by defining one good clock to then propagate the definition to others. Rather, one must define the whole relative network of (both actual and potential) good clocks all at once, via the covariance group $\mathcal{G}_c$ itself. And a good clock is not detachable from the network in which it partakes: Good clocks and their relations codefine each other; relata and relations are coextensive [85].

C. Relational quantization

We are, at last, in position to flesh out the notion of relational quantization alluded to at the end of Sec. III D. It shall be first defined in the context of MFT, specifically NR MFT as discussed above. This will give the template to follow for the relational quantization for gRGFTs, which we outline to conclude the section.

1. QM as the relational quantization of MFT

Let us consider first the case of nonanomalous quantum MFTs: Those defined by PI that are basic $Z \in \Omega^0_{\mathrm{basic}}(\Phi, \mathbb{C})$, i.e., $R^\star_\psi Z = Z$ or $Z(\phi^\psi) = Z(\phi)$, for $Z(\phi) = \int \mathcal{D}\phi\, e^{i/\hbar S(\phi)}$, with $\mathcal{D}\phi = \mathcal{D}x\mathcal{D}t$ is a formal integration measure on Φ. By definition of a basic form, it must induce (or arise from the pullback of) a corresponding 0-form $\tilde{Z} \in \Omega^0(\mathcal{M}, \mathbb{C})$ on the moduli base space $\mathcal{M}$ of physical d.o.f., i.e., the space of paths (kinematical histories) in $\mathscr{C}$, the configuration spacetime, $\mathcal{M} = \mathcal{P}(\mathscr{C})$. It is *a priori* better to work with $\tilde{Z}$ that involves only physical relational d.o.f., instead of Z that involves "gauge" d.o.f. Yet, as we observed in Sec. III D, typically in field theory one does not work on $\mathcal{M}$ directly, but rather with a gauge-fixed version $Z(\phi)_{|\,\mathrm{GF}(\sigma)}$ defined by Eq. (96) via a section $\sigma : \mathcal{M} \to \Phi$. The drawback is that this manifestly breaks $\mathrm{Diff}(I)$ covariance. The choice $\dot{t} = 1$ discussed in Sec. IV B 2 could be interpreted as such a section, via $\mathrm{Im}(\sigma) = \{\phi = (x, t) \in \Phi \,|\, \dot{t} = 1\}$.

In contrast, the DFM yields a manifestly $\mathrm{Diff}(I)$-invariant quantization scheme via the *dressed PI*,

$$Z^{\boldsymbol{v}}(\phi) := Z(\phi^{\boldsymbol{v}}) = \int \mathcal{D}\phi^{\boldsymbol{v}}\, e^{i/\hbar S(\phi^{\boldsymbol{v}})}, \quad \in \Omega^0_{\mathrm{basic}}(\Phi, \mathbb{C}) = \Omega^0(\Phi^{\boldsymbol{v}}, \mathbb{C}), \tag{149}$$

with dressed action integral $S(\phi^{\boldsymbol{v}}) = S^{\boldsymbol{v}}(\phi)$ given by Eq. (118) and $\mathcal{D}\phi^{\boldsymbol{v}} = \mathcal{D}x^{\boldsymbol{v}}\mathcal{D}t^{\boldsymbol{v}}$. Contrary to Z, $Z^{\boldsymbol{v}}$ is invariant not by virtue of its functional form but because it is built from invariant fields. As the above indeed expresses already, the dressed PI can simply be seen as a functional on the space of dressed fields, $Z^{\boldsymbol{v}} : \Phi^{\boldsymbol{v}} \to \mathbb{C}$, with $\mathcal{D}\phi^{\boldsymbol{v}}$ the integration measure on $\Phi^{\boldsymbol{v}}$. And, as the latter is a good coordinatization of the moduli space, $\Phi^{\boldsymbol{v}} \sim \mathcal{M} \simeq \mathcal{P}(\mathscr{C})$, we indeed have that $Z^{\boldsymbol{v}} \simeq \tilde{Z}$. Furthermore, since for a ϕ-dependent dressing field $\boldsymbol{v}$, $\phi^{\boldsymbol{v}}$ are explicitly relational variables, we may say that the dressed PI (149) defines a relational quantization scheme.

Issues related to gauge reduction, boundary conditions, measure factors, and possible global obstructions are naturally tied to the geometric structure underlying the MFT configuration space—and to the covariant phase-space formulation discussed in Appendix A. In the present setting, once the dressed PI is shown to reproduce the standard quantum-mechanical PI, these aspects reduce correspondingly to their standard counterparts in ordinary QM. From this viewpoint, the dressing procedure does not introduce additional structures in the quantization, but rather provides a geometric organization of the underlying redundancy and its reduction, together with an automatic anomaly cancellation mechanism, discussed in the following.

This analysis also clarifies why the DFM becomes particularly powerful when extended beyond the MFT setting to field-space constructions for gRGFTs, where the geometric organization of gauge, relational, and anomaly structures become essential for the formulation of an invariant relational PI quantization. In such contexts, physically meaningful information from anomalies is not lost, but rather reappears through transformations of the dressing fields themselves, encoding changes of physical reference frames (cf. Sec. IV C 3).

Considering NR MFT with Lagrangian $L(\phi) = L(x,t) = (\frac{m}{2}\langle v, v\rangle - V(x))\,dt = (\frac{m}{2}\langle \dot{x}, \dot{x}\rangle \dot{t}^{-1} - V(x)\dot{t}\,)\,d\tau$, then NR quantum MFT is given by the bare PI $Z(\phi) = Z(x,t)$ as above. It is easy to see that the condition $\dot{t} = 1$, viewed as a gauge fixing, leads to $Z(\phi)_{|\,\mathrm{GF}(\sigma)}$, which much resembles the standard Feynman-Dirac PI of NR QM. Yet it cannot truly be the same, as it is not defined on the space of $\mathrm{Diff}(I)$-invariant d.o.f. (paths) $\mathcal{M} = \mathcal{P}(\mathscr{C})$. We claim that the latter is actually reproduced via DFM. Indeed, the dressed PI for NR MFT is given by Eq. (149) with the dressed Lagrangian (125) $L(\phi^{\boldsymbol{v}}) = L(x^{\boldsymbol{v}}, t^{\boldsymbol{v}}) = (\frac{m}{2}\langle v^{\boldsymbol{v}}, v^{\boldsymbol{v}}\rangle - V(x^{\boldsymbol{v}}))\,dt^{\boldsymbol{v}} = (\frac{m}{2}\langle \partial_{\bar{t}} x^{\boldsymbol{v}}, \partial_{\bar{t}} x^{\boldsymbol{v}}\rangle (\partial_{\bar{t}} t^{\boldsymbol{v}})^{-1} - V(x^{\boldsymbol{v}})\ \partial_{\bar{t}} t^{\boldsymbol{v}}\,)\,d\bar{t}$. However, as we have seen, this formal result must be fleshed out by producing an explicit ϕ-dependent dressing field [86]. This was done in Sec. IV B 2, by identifying the clock field as the dressing field (128) through the condition (138), $\partial_{\bar{t}}\boldsymbol{v} = 1$.

One then gets the final result that the $\mathrm{Diff}(I)$-invariant relational quantization of NR MFT is

$$Z(\phi^{\boldsymbol{v}}) = Z(\bar{x}, \mathrm{id}_{\mathcal{T}}) = \int \mathcal{D}\bar{x}\; e^{i/\hbar\, S(\bar{x}, \mathrm{id}_{\mathcal{T}})} \quad \in \Omega^0(\Phi^{\boldsymbol{v}}, \mathbb{C}) \simeq \Omega^0(\mathcal{P}(\mathscr{C}), \mathbb{C}), \tag{150}$$

with the dressed Lagrangian (134) $L(\phi^{\boldsymbol{v}}) = L(\bar{x}, \mathrm{id}_{\mathcal{T}}) = (\frac{m}{2}\langle \bar{v}, \bar{v}\rangle - V(\bar{x}))\,d\bar{t}$: This is the textbook PI for NR QM. As one might have expected, the relational structure of classical NR mechanics carries over to the quantum theory.

Of course, the dressed PI (150) is not invariant under transformations of the second kind $\mathrm{Diff}(\mathcal{T})$, i.e., arbitrary clock changes, since as we have seen in Sec. IV B 3 the dressed action $S^{\boldsymbol{v}} = S(\bar{x}, \mathrm{id}_{\mathcal{T}})$ is not. Yet, the latter's covariance group $\mathcal{G}_c \subset \mathrm{Diff}(\mathcal{T})$ defines the relational network of good clocks. It is interesting to inquire whether the $\mathrm{Diff}(\mathcal{T})$ transformation of the formal measure $\mathcal{D}\bar{x}$ concurs, or gives additional information: One finds

$$\mathcal{D}\bar{x}' = \mathcal{D}\bar{x}^{\varphi} = \mathcal{D}\bar{x}\ \exp\left\{ -\frac{1}{2}\int \ln(\partial_{\bar{t}}\varphi)\,d\bar{t} \right\}. \tag{151}$$

So, $Z^{\boldsymbol{v}}$ and $S^{\boldsymbol{v}}$ have the same covariance group $\mathcal{G}_c$. One may call the exponential term in Eq. (151) a transformation of the second kind anomaly, not to be conflated with *gauge* anomalies, which are automatically canceled via the DFM.

2. *Automatic* Diff(I)*-anomaly cancellation via dressing*

As observed in Sec. III D, the PI on the bare field space Φ is in general a cocyclic tensorial 0-form $Z \in \Omega^0_{\mathrm{tens}}(\Phi, C)$ whose $\mathrm{Diff}(I)$ equivariance is given by Eq. (95): $R^{\star}_{\psi} Z = C(\ ;\psi)^{-1} Z$. If so the PI is anomalous and the 1-cocycle $C(\phi;\psi)$, satisfying Eq. (23), is the integrated $\mathrm{Diff}(I)$ anomaly, arising possibly from the noninvariance of the integration measure on Φ: The $\mathrm{Diff}(I)$ anomaly being $a(X;\phi) = \frac{d}{ds} C(\phi;\psi_s)|_{s=0}$, with $\psi_{s=0} = \mathrm{id}_I$ and $X := \frac{d}{ds}\psi_s|_{s=0} \in \mathfrak{diff}(I)$, and satisfies the Abelian version of the $\mathfrak{diff}(I)$ 1-cocycle property (26) [87].

Suppose that the 1-cocycle formally extends as $C : \Phi \times \mathcal{D}r[J,I] \to U(1)$, $(\phi, \boldsymbol{v}) \mapsto C(\phi;\upsilon)$, so that for a ϕ-dependent dressing field $\boldsymbol{v}$ we introduce the notation $C(\boldsymbol{v}) := C(\phi;\boldsymbol{v}(\phi))$, so $C(\boldsymbol{v}) : \Phi \to U(1)$. By the defining 1-cocycle property (23) and the defining property of the dressing field $\boldsymbol{v}$, we have that

$$\begin{aligned} C(\psi^*\phi;\boldsymbol{v}(\psi^*\phi)) &= C(\psi^*\phi;\psi^{-1}\circ\boldsymbol{v}(\phi)) = C(\psi^*\phi;\psi^{-1})\,C(\psi^{-1*}\psi^*\phi;\boldsymbol{v}(\phi)) \\ &= C(\phi;\psi)^{-1} C(\phi;\boldsymbol{v}(\phi)) \Leftrightarrow R^{\star}_{\psi} C(\boldsymbol{v}) = C(_\,;\psi)^{-1} C(\boldsymbol{v}). \end{aligned} \tag{152}$$

That is, $C(\boldsymbol{v})$ is a *cocyclic dressing field*. The linear version of its equivariance property is $\boldsymbol{L}_{X^v}C(\boldsymbol{v}) = -a(X;\phi)\,C(\boldsymbol{v})$. The dressed PI (149) for an anomalous theory is thus

$$Z^{\boldsymbol{v}}(\phi) = Z(\phi^{\boldsymbol{v}}) = C(\boldsymbol{v})^{-1}Z(\phi), \tag{153}$$

illustrating again the DFM rule of thumb. It is by construction $\mathrm{Diff}(I)$-invariant, $R^\star_\psi Z^{\boldsymbol{v}} = Z^{\boldsymbol{v}}$, or $\boldsymbol{L}_{X^v}Z^{\boldsymbol{v}} = 0$, as can be easily checked. Meaning that in the dressed PI, anomalies are automatically canceled via the cocyclic dressing field $C(\boldsymbol{v})$. This encompasses as a special case the construction of so-called WZ counterterms, usually introduced by hand to cancel anomalies. See next section for more on this.

We may observe that since $Z^{\boldsymbol{v}} \in \Omega^0_{\text{basic}}(\Phi)$, the variation $\boldsymbol{d}Z^{\boldsymbol{v}} \in \Omega^1_{\text{basic}}(\Phi)$ is geometrically well defined, while $\boldsymbol{d}Z$ is not; as mentioned in Sec. II B, $\boldsymbol{d}$ is a covariant derivative for basic, not tensorial, forms. Relatedly, remark that Eq. (152), together with its linearization, implies that $\boldsymbol{\varpi}_0 := -\boldsymbol{d}C(\boldsymbol{v})\,C(\boldsymbol{v})^{-1}$ is a flat cocyclic connection on Φ as defined by Eq. (42). Then, the cocyclic covariant derivative of the anomalous PI is the twisted tensorial 1-form $\boldsymbol{D}_0Z := \boldsymbol{d}Z + \boldsymbol{\varpi}_0 Z \in \Omega^1_{\text{tens}}(\Phi, C)$. It is easy to see that $(\boldsymbol{D}_0Z)^{\boldsymbol{v}} = C(\boldsymbol{v})^{-1}\boldsymbol{D}_0Z = \boldsymbol{d}Z^{\boldsymbol{v}}$. This indicates a link between $\boldsymbol{D}_0Z$ and WZ counterterms.

Say one defines the anomalous effective quantum functional $W := -i\ln Z$ as well as $c(_;\psi) := -i\ln C(_;\psi)$ so that $R^\star_\psi W = W - c(_;\psi)$, or $\boldsymbol{L}_{X^v}W = a(X;\phi)$. Suppose we may similarly define $c(\boldsymbol{v}) := -i\ln C(\boldsymbol{v})$, which by Eq. (152) is an Abelian cocyclic dressing field: i.e., $R^\star_\psi c(\boldsymbol{v}) = c(\boldsymbol{v}) - c(_;\psi)$ or $\boldsymbol{L}_{X^v}c(\boldsymbol{v}) = a(X;\phi)$. Then, $\boldsymbol{D}_0Z = iZ\,\boldsymbol{d}(W - c(\boldsymbol{v}))$, and since Z and $\boldsymbol{D}_0Z$ have identical (twisted) equivariance, we have $W^{\boldsymbol{v}} := W - c(\boldsymbol{v}) \in \Omega^0_{\text{basic}}(\Phi)$. This is (the DFM generalization of) a version of the WZ construction: $c(\boldsymbol{v})$ cancels the anomaly of W. Clearly the horizontality condition $\iota_{X^v}\boldsymbol{D}_0Z = 0$ is equivalent to the $\mathfrak{diff}(I)$ invariance of the dressed (or WZ "improved") effective quantum functional, $\boldsymbol{L}_{X^v}W^{\boldsymbol{v}} = 0$. Again, $\boldsymbol{d}W^{\boldsymbol{v}} \in \Omega^1_{\text{basic}}(\Phi)$ is geometrically well defined, contrary to $\boldsymbol{d}W$.

3. Relational quantization of general-relativistic gauge field theories

Our premise has been to show that (NR) MFT is a special case of the broader framework of gRGFT. In the latter, the field space Φ is generically made of fields $\phi = \{\omega, \varpi = (A, e), \psi, \varphi, \dots\}$ comprising Ehresmann connection(s) ω (Yang-Mills type gauge potentials), Cartan connection ϖ (gravitational potential) made of A a spin-type connection and e the soldering (or vielbein) 1-form, spinor field(s) ψ (matter), scalar field(s) φ, etc. The structure group of Φ as a principal bundle, the covariance group of gRGFTs, is $\mathrm{Diff}(M) \ltimes \mathcal{H}$ with $\mathcal{H}$ an internal gauge group [e.g., $\mathcal{SU}(N)$ or $\mathcal{SO}(1,3)$] and $\mathrm{Diff}(M)$ the diffeomorphism group of a manifold M *representing* spacetime [88]. The right action of the structure group on Φ is $R_{(\psi,\gamma)}\phi := \psi^*(\phi^\gamma) =: \phi^{(\psi,\gamma)}$, with $(\psi,\gamma) \in \mathrm{Diff}(M) \ltimes \mathcal{H}$ and where ϕ^γ generically denote the gauge $\mathcal{H}$ transformation of ϕ. This action induces a fibration of field space $\Phi \to \mathcal{M}$ where the base $\mathcal{M}$ is the moduli space of fields, containing the invariant physical d.o.f. The bundle geometry of the field space Φ of gRGFTs was studied in detail in Ref. [2,89]—yielding the specialization to MFT described in Secs. II and III A—and general results were derived on the transformations under the gauge group $\mathbf{Diff}(M) \ltimes \mathcal{H}$ (a.k.a. field-dependent gauge transformations) of their Lagrangian, action, variational principle and field equations [90].

Now, the standard PI quantization of (gR)GFT is defined on Φ [91]: One writes $Z(\phi) := \int \mathcal{D}\phi\ e^{i/\hbar S(\phi)}$, with $\mathcal{D}\phi$ being a formal measure on Φ. From this, one derives the effective quantum functional $W(\phi) := -i\ln Z(\phi)$. This is the textbook approach, which we followed in Sec. III D to discuss quantization of MFT. As is well known, it is supplemented by gauge fixing, e.g., via the BRST formalism. While $Z(\phi)$ above is often thought of as the direct analog of the standard PI of (NR) QM, it should be clear that it actually is not: The latter [Eq. (150)] is the dressed PI defining a case of relational quantization. The conceptual and technical landscape is summarized in Table II.

It is clear that the standard PI for GFT is the analog of the "bare" PI for MFT. To complete the table and find the true analog of standard (NR) PI for gRGFT, one must define relational quantization for the latter.

To do so, one should start from the relational formulation of classical gRGFT via DFM as detailed in Ref. [2]: This presupposes that we have found (built) a dressing field $(\boldsymbol{v}, \boldsymbol{u}) = (\boldsymbol{v}(\phi), \boldsymbol{u}(\phi))$ for

TABLE II. Bare vs dressed PI quantization.

	NR MFT	gRGFT
Quantization on field space Φ	$\surd$ (parametrized PI)	$\surd$ [standard PI for (gR)GFT]
Relational quantization on $\mathcal{M} \simeq \mathcal{P}(\mathscr{C})$	$\surd$ (standard PI for QM)	?

the covariance group $\mathrm{Diff}(M) \ltimes \mathcal{H}$, with $\boldsymbol{u}$ a dressing field for the internal gauge group $\mathcal{H}$, and that we have defined the invariant dressed fields $\phi^{(\boldsymbol{v},\boldsymbol{u})} := \boldsymbol{v}^*(\phi^{\boldsymbol{u}})$ which, in view of the ϕ dependence of $(\boldsymbol{v}, \boldsymbol{u})$, manifestly are relational variables. These then provide a relational coordinatization of the moduli space $\mathcal{M}$ (or possibly only a region thereof), since $\phi^{(\boldsymbol{v},\boldsymbol{u})}$ maps to a $\mathrm{Diff}(M) \ltimes \mathcal{H}$-class $[\phi] \in \mathcal{M}$. The dressed classical action is then $S^{(\boldsymbol{v},\boldsymbol{u})} = \int_{U^{\boldsymbol{v}}} L^{(\boldsymbol{v},\boldsymbol{u})} = \int_{U^{\boldsymbol{v}}} \boldsymbol{v}^* L(\phi^{\boldsymbol{u}})$, where $U^{\boldsymbol{v}}$ is a $\mathrm{Diff}(M)$-invariant, ϕ-dependent, region of *physical spacetime* [92]. One thus defines relational quantization of gRGFTs via a dressed PI:

$$Z^{(\boldsymbol{v},\boldsymbol{u})}(\phi) := Z(\phi^{(\boldsymbol{v},\boldsymbol{u})}) = \int \mathcal{D}\phi^{(\boldsymbol{v},\boldsymbol{u})}\, e^{i/\hbar S^{(\boldsymbol{v},\boldsymbol{u})}} \in \Omega^0_{\mathrm{basic}}(\Phi, \mathbb{C}) = \Omega^0(\Phi^{(\boldsymbol{v},\boldsymbol{u})}, \mathbb{C}) \simeq \Omega^0(\mathcal{M}, \mathbb{C}), \tag{154}$$

with $\mathcal{D}\phi^{(\boldsymbol{v},\boldsymbol{u})}$ a formal measure on the space of invariant dressed fields $\Phi^{(\boldsymbol{v},\boldsymbol{u})}$. Clearly, Eq. (149) is now seen as a special case (in 1D MFT, and no gauge group $\mathcal{H}$) of Eq. (154). We may observe that this PI bypasses the notion of gauge fixing, which it does not need. In particular, BRST gauge fixing is not only superfluous but cannot be implemented since the BRST transformations of the dressed fields $\phi^{(\boldsymbol{v},\boldsymbol{u})}$, mimicking $\mathrm{Diff}(M) \ltimes \mathcal{H}$ transformations, are trivial [93].

The definition (154) applies to anomalous and non-anomalous theories alike. In the former case, by definition, the PI transforms under $\mathrm{Diff}(M) \ltimes \mathcal{H}$ as $R^\star_{(\psi,\gamma)} Z = C(_\,; (\psi, \gamma))^{-1} Z$, where $C : \Phi \times (\mathrm{Diff}(M) \ltimes \mathcal{H}) \to U(1)$, $(\phi, (\psi, \gamma)) \mapsto C(\phi; (\psi, \gamma))$, is a 1-cocycle of the (structure) group $\mathrm{Diff}(M) \ltimes \mathcal{H}$, i.e., functionally satisfying

$$C(\phi; (\psi, \gamma) \cdot (\psi', \gamma')) = C(\phi; (\psi, \gamma))\, C(\phi^{(\psi,\gamma)}; (\psi', \gamma')), \tag{155}$$

where on the left-hand side "$\cdot$" stands for the semidirect product of $\mathrm{Diff}(M) \ltimes \mathcal{H}$ given by $(\psi, \gamma) \cdot (\psi', \gamma') := (\psi \circ \psi', \gamma\, (\psi^{-1*}\gamma'))$. The cocycle encodes the (integrated) combined diffeomorphism and gauge anomaly $a((X, \lambda); \phi)$, with $(X, \lambda) \in \mathfrak{diff}(M) \oplus \mathrm{Lie}\mathcal{H}$, from which it is obtained by linearization. As usual, the nontrivial equivariance, yielding the 1-cocycle C, comes from the noninvariance of the measure $\mathcal{D}\phi$. This implies the gauge transformation $Z^{(\boldsymbol{\psi},\boldsymbol{\gamma})} = C(\boldsymbol{\psi}, \boldsymbol{\gamma})^{-1} Z$ for elements of the gauge group $(\boldsymbol{\psi}, \boldsymbol{\gamma}) \in \mathbf{Diff}(M) \ltimes \mathcal{H}$, where we have defined the notation $C(\boldsymbol{\psi}, \boldsymbol{\gamma}) := C(\phi; (\boldsymbol{\psi}(\phi), \boldsymbol{\gamma}(\phi)))$. For such an anomalous theory, we have that Eq. (154) is

$$Z^{(\boldsymbol{v},\boldsymbol{u})} = C(\boldsymbol{v}, \boldsymbol{u})^{-1} Z \tag{156}$$

by the DFM rule of thumb, where $C(\boldsymbol{v}, \boldsymbol{u})$ is shown to satisfy $R^\star_{(\psi,\gamma)} C(\boldsymbol{v}, \boldsymbol{u}) = C(_\,; (\psi, \gamma))^{-1} C(\boldsymbol{v}, \boldsymbol{u})$ using the defining property of the dressing field, $R^\star_{(\psi,\gamma)}(\boldsymbol{v}, \boldsymbol{u}) = (\psi, \gamma)^{-1} \cdot (\boldsymbol{v}, \boldsymbol{u})$, and Eq. (155) [see Eqs. (349)–(351) in Ref. [2] for a proof); it is thus a cocyclic dressing field, and gauge transforms as

$$C(\boldsymbol{v}, \boldsymbol{u})^{(\boldsymbol{\psi},\boldsymbol{\gamma})} = C(\boldsymbol{\psi}, \boldsymbol{\gamma})^{-1} C(\boldsymbol{v}, \boldsymbol{u}). \tag{157}$$

The linearization of its equivariance is $\boldsymbol{L}_{(X,\lambda)^v} C(\boldsymbol{v}, \boldsymbol{u}) = -a((X, \lambda); \phi)\, C(\boldsymbol{v}, \boldsymbol{u})$. Manifestly, the cocyclic dressing compensates for the transformation of the anomalous PI, so that Eq. (156) remains fully invariant: i.e., the dressed PI of relational quantization has an in-built anomaly cancellation mechanism.

A "linear" version of this applies to the effective quantum functional $W := -i \ln Z$, which, defining similarly $c(_\,; (\psi, \gamma)) := -i \ln C(_\,; (\psi, \gamma))$, is s.t. $R^\star_{(\psi,\gamma)} W = W - c(_\,; (\psi, \gamma))$, or infinitesimally $\boldsymbol{L}_{(X,\lambda)^v} W = -a((X, \lambda); \phi)$ [94]. Writing $c(\boldsymbol{v}, \boldsymbol{u}) := -i \ln C(\boldsymbol{v}, \boldsymbol{u})$, we have by Eq.

(156) (or by the DFM rule of thumb),

$$W^{(\boldsymbol{v},\boldsymbol{u})} := W - c(\boldsymbol{v},\boldsymbol{u}) \quad \in \Omega^0_{\text{basic}}(\Phi), \tag{158}$$

where $R^{\star}_{(\psi,\gamma)}c(\boldsymbol{v},\boldsymbol{u}) = c(\boldsymbol{v},\boldsymbol{u}) - c(_;(\psi,\gamma))$ or $\boldsymbol{L}_{(X,\lambda)^v}c(\boldsymbol{v},\boldsymbol{u}) = -a((X,\lambda);\phi)$; i.e., the "linear" cocyclic dressing field $c(\boldsymbol{v},\boldsymbol{u})$ compensates for the anomalous transformation of W.

The above encompasses as a special case the construction of WZ counterterms, which are recovered as cocyclic dressing fields where $(\boldsymbol{v},\boldsymbol{u}) = (v,u)$ are *ad hoc*, introduced *by hand* in a theory rather than built from its field content ϕ (see, e.g., Sec. 12.3 of Ref. [95], Chap. 15 of Ref. [96], or the end of Chap. 4 of Ref. [97]).

Now, should transformations of the second kind (parametrizing the ambiguity in the choice of dressing field)—such as described in Sec. IV A 2 in the context of MFT—be present, they might have anomalies of their own, giving rise to what we may call suggestively an "anomaly seesaw mechanism."

Seesaw mechanism for anomalies. As detailed in Sec. 5.3.2 of Ref. [2], in the context of the DFM for gRGFTs, transformations of the second kind may arise thus: Another dressing field has to be $(\boldsymbol{v}',\boldsymbol{u}') = (\boldsymbol{v}\circ\varphi,\ \boldsymbol{u}\zeta)$, for $\varphi \in \mathrm{Diff}(N)$, with $N = \mathrm{Im}(\boldsymbol{v}^*)$ the source space of the $\mathrm{Diff}(M)$-dressing field $\boldsymbol{v}$, and $\zeta \in \mathcal{G} := \{\zeta : M \to G \,|\, \zeta^\gamma = \zeta\}$ with $\gamma \in \mathcal{H}$ and H (the target space of the dressing field $\boldsymbol{u}$) supporting a right action by G. This can be rewritten as

$$(\boldsymbol{v}',\ \boldsymbol{u}') = (\boldsymbol{v}\circ\varphi,\ \boldsymbol{u}\,(\boldsymbol{v}^{-1*}\bar{\zeta})) =: (\boldsymbol{v},\ \boldsymbol{u})\cdot(\varphi,\ \bar{\zeta}\ ), \tag{159}$$

where $\bar{\zeta} := \boldsymbol{v}^*\zeta \in \bar{\mathcal{G}} := \{\bar{\zeta} : N \to G \,|\, \bar{\zeta}^\gamma = \bar{\zeta}\}$, and the second equality defines the right action of $\mathrm{Diff}(N) \ltimes \bar{\mathcal{G}}$ on the space of $(\mathrm{Diff}(M) \ltimes \mathcal{H})$-dressing fields via a semidirect product structure [98]. Now, two cases are to be distinguished.

The first, (A), is if transformations of the second kind do not affect the bare fields, $\phi^{(\varphi,\bar{\zeta})} = \phi$. Then, the dressed fields $\phi^{(\boldsymbol{v},\boldsymbol{u})}$ transform as $(\phi^{(\boldsymbol{v},\boldsymbol{u})})^{(\varphi,\bar{\zeta})} := \phi^{(\boldsymbol{v}',\boldsymbol{u}')} = \varphi^*[(\phi^{(\boldsymbol{v},\boldsymbol{u})})^{\bar{\zeta}}]$, where $(\phi^{(\boldsymbol{v},\boldsymbol{u})})^{\bar{\zeta}}$ has the same functional expression as the $\mathcal{H}$ transformation ϕ^γ of the bare fields. Analogously, the cocyclic dressing transforms as

$$C(\boldsymbol{v},\ \boldsymbol{u})^{(\varphi,\bar{\zeta})} := C(\phi;(\boldsymbol{v}',\ \boldsymbol{u}')) = C(\phi;(\boldsymbol{v},\ \boldsymbol{u})\cdot(\varphi,\ \bar{\zeta}\ )) = C(\phi;(\boldsymbol{v},\ \boldsymbol{u}))\, C(\phi^{(\boldsymbol{v},\boldsymbol{u})};(\varphi,\ \bar{\zeta}\ )), \tag{160}$$

using again the defining property (155) of the cocycle C. Correspondingly, the linear cocycle $c(\boldsymbol{v},\boldsymbol{u})$ transforms as $c(\boldsymbol{v},\ \boldsymbol{u})^{(\varphi,\bar{\zeta})} = c(\boldsymbol{v},\ \boldsymbol{u}) + c(\phi^{(\boldsymbol{v},\boldsymbol{u})};(\varphi,\ \bar{\zeta}\ ))$. Infinitesimally, this yields $\delta_{(Y,\bar{\xi})}\, c(\boldsymbol{v},\boldsymbol{u}) = -a((Y,\bar{\xi}\ );\phi^{(\boldsymbol{v},\boldsymbol{u})})$, for $(Y,\bar{\xi}\ ) \in \mathfrak{diff}(N) \oplus \mathrm{Lie}\bar{\mathcal{G}}$, which is the anomaly for transformations of the second kind. The term $C(\phi^{(\boldsymbol{v},\boldsymbol{u})};(\varphi,\bar{\zeta}\ ))$ is thus its "integrated," or global, version. From all this follows that the dressed PI (156) and effective functional (158) transform as

$$\begin{aligned} Z(\phi^{(\boldsymbol{v},\boldsymbol{u})})^{(\varphi,\bar{\zeta})} &= C(\phi^{(\boldsymbol{v},\boldsymbol{u})};(\varphi,\ \bar{\zeta}\ ))^{-1}\, Z(\phi^{(\boldsymbol{v},\boldsymbol{u})}), \\ W(\phi^{(\boldsymbol{v},\boldsymbol{u})})^{(\varphi,\bar{\zeta})} &= W(\phi^{(\boldsymbol{v},\boldsymbol{u})}) - c(\phi^{(\boldsymbol{v},\boldsymbol{u})};(\varphi,\ \bar{\zeta}\ )). \end{aligned} \tag{161}$$

Infinitesimally, this gives, in particular, $\delta_{(Y,\bar{\xi})}\, W(\phi^{(\boldsymbol{v},\boldsymbol{u})}) = -a((Y,\bar{\xi}\ );\phi^{(\boldsymbol{v},\boldsymbol{u})})$, i.e., the anomalous Ward Identity for the dressed effective functional. Remark that the anomaly for transformations of the second kind has the same functional expression as the initial anomaly of $\mathrm{Diff}(M) \ltimes \mathcal{H}$, dressed fields replacing bare ones and the parameters $(Y,\bar{\xi})$ replacing the gauge parameters (X,λ).

The second case, (B), is if transformations of the second kind do indeed affect bare fields, $\phi^{(\varphi,\bar{\zeta})} \neq \phi$. Then, the transformations of dressed fields, $(\phi^{(\boldsymbol{v},\boldsymbol{u})})^{(\varphi,\bar{\zeta})}$, have to be computed on a case by case basis; no shortcut can *a priori* be given to find the $(\mathrm{Diff}(N) \ltimes \bar{\mathcal{G}})$ transformation of the dressed PI and/or effective functional. Generically, one should find

$$\begin{aligned} Z(\phi^{(\boldsymbol{v},\boldsymbol{u})})^{(\varphi,\bar{\zeta})} &= \bar{C}(\phi^{(\boldsymbol{v},\boldsymbol{u})};(\varphi,\ \bar{\zeta}\ ))^{-1}\, Z(\phi^{(\boldsymbol{v},\boldsymbol{u})}), \\ W(\phi^{(\boldsymbol{v},\boldsymbol{u})})^{(\varphi,\bar{\zeta})} &= W(\phi^{(\boldsymbol{v},\boldsymbol{u})}) - \bar{c}(\phi^{(\boldsymbol{v},\boldsymbol{u})};(\varphi,\ \bar{\zeta}\ )), \end{aligned} \tag{162}$$

where $\bar{C}$, or $\bar{c}$, is a 1-cocycle for the group $(\mathrm{Diff}(N) \ltimes \bar{\mathcal{G}})$, distinct from C, or c. Infinitesimally, we get, in particular, $\delta_{(Y,\bar{\xi})}\, W(\phi^{(\boldsymbol{v},\boldsymbol{u})}) = -\bar{a}((Y,\bar{\xi}\ );\phi^{(\boldsymbol{v},\boldsymbol{u})})$; i.e., the anomaly for transformations of

the second kind has a functional expression *a priori* distinct from that of the initial $(\mathrm{Diff}(M) \ltimes \mathcal{H})$ anomaly.

The clock change transformations of Sec. IV B 3, with anomaly given in relational quantization of MFT by Eq. (151), may be seen as an example of case (B). A famous example of case (A) is none other than the shift, achieved via the *Bardeen-Zumino term*, between Lorentz and Einstein anomalies in theories $S(\phi) = S(\psi, A, e)$ of chiral fermions ψ coupled to the gravitational field; the $(\mathfrak{so}(1,3) \oplus \mathbb{R}^4)$-valued Cartan connection $\bar{A} = (A, e)$, with A the spin connection and $e = e^a{}_\mu\, dx^\mu =: \boldsymbol{e} \cdot dx$ the soldering form. The effective functional is $W = W(e)$, the fermions being integrated and $A = A(e)$ being taken torsion-free (see, e.g., Chap. 12 of Ref. [97] and Chap. 15 of Ref. [96]).

The framework above can indeed specialize to $\mathcal{H} = \mathcal{SO}(1,3)$ the Lorentz gauge group and $\bar{\mathcal{G}} = \mathcal{GL}(4)$ the group of local coordinate changes [or $\bar{G} = \mathrm{Diff}(M)$]. The ϕ-dependent (i.e., non *ad hoc*) dressing field is the tetrad field, $\boldsymbol{u}(\phi) := \boldsymbol{e} = e^a{}_\mu : M \to GL(4)$, satisfying indeed the dressing field defining property $\boldsymbol{e}^\gamma = \gamma^{-1}\boldsymbol{e}$ for $\gamma \in \mathcal{SO}(1,3)$, and also subject to transformations of the second kind $\boldsymbol{e}^{\bar{\zeta}} := \boldsymbol{e}\bar{\zeta}$, where $\bar{\zeta} \in \mathcal{GL}(4)$ is the Jacobian of a coordinate change (or of a diffeomorphism). The bare fields of the theory $\phi = \{\psi, A, e\}$, being forms, are all $\mathcal{GL}(4)$-invariant; $\phi^{\bar{\zeta}} = \phi$, showing that we are indeed in case (A) [99]. The bare gravitational field $\bar{A} = (A, e)$ thus gets dressed as $\bar{A}^{\boldsymbol{u}} = (A^{\boldsymbol{u}}, e^{\boldsymbol{u}}) := (\boldsymbol{e}^{-1}A\boldsymbol{e} + \boldsymbol{e}^{-1}d\boldsymbol{e},\ \boldsymbol{e}^{-1}e) =: (\Gamma, dx)$, yielding $\mathcal{SO}(1,3)$-invariant fields, $(\bar{A}^{\boldsymbol{u}})^\gamma = \bar{A}^{\boldsymbol{u}}$, but supporting transformations of the second kind by $\mathcal{GL}(4)$; $(\bar{A}^{\boldsymbol{u}})^{\bar{\zeta}} = (\Gamma^{\bar{\zeta}}, dx^{\bar{\zeta}}) = (\bar{\zeta}^{-1}\Gamma\bar{\zeta} + \bar{\zeta}^{-1}d\bar{\zeta},\ \bar{\zeta}^{-1}dx)$. We may add that $e^t := e^T\eta = dx \cdot \boldsymbol{e}^T\eta$, with η the Minkowski metric and "$(_)^T$" the matrix transpose, $\mathcal{SO}(1,3)$ transforming as $(e^t)^\gamma = e^t\gamma$, is dressed as $(e^t)^{\boldsymbol{u}} := e^t\boldsymbol{e} = dx \cdot \boldsymbol{e}^T\eta\boldsymbol{e} := dx \cdot g$, where g is a metric on M. If $A = A(e)$—i.e., if the Cartan connection is *normal* [100–104] — then $\Gamma = \Gamma(g)$. Of course, the fermions cannot be dressed via $\boldsymbol{u} = \boldsymbol{e}$, as "$\psi^{\boldsymbol{u}} := \rho(\boldsymbol{e})^{-1}\psi$," since $GL(4)$ has no (finite) spinor representation [105], but they are integrated out so that in the analysis of the transformation of the effective functional W only the gravitational field contributes. The $\mathcal{SO}(1,3)$ anomaly is $L_{\lambda^v}W(e,A) = -a(\lambda; A(e))$, with $\lambda \in \mathrm{Lie}\mathcal{SO}(1,3)$, and explicit computation shows it to relate to an antisymmetric part for the effective energy-momentum tensor $\langle T_{ab}\rangle$. The integrated version is $R^\star_\gamma W = W - c(_;\gamma)$. Specializing Eq. (158), one has the dressed effective functional

$$W^{\boldsymbol{u}}(e,A) = W(g,\Gamma) := W(e,A) - c(\boldsymbol{u}) \quad \in \Omega^0_{\mathrm{basic}}(\Phi), \tag{163}$$

where the linear cocyclic dressing $c(\boldsymbol{u}) = c(\phi; \boldsymbol{u}(\phi)) = c(\bar{A}; \boldsymbol{e})$ is the Bardeen-Zumino term, which by (the linear and infinitesimal versions of) Eqs. (157) and (160) satisfies

$$\boldsymbol{L}_{\lambda^v}c(\boldsymbol{u}) = -a(\lambda; e, A) \quad \text{and} \quad \delta_{\bar{\xi}}\, c(\boldsymbol{u}) = -a(\bar{\xi}; g, \Gamma), \tag{164}$$

where $\bar{\xi} \in \mathrm{Lie}\mathcal{GL}(4)$ is the Jacobian of an infinitesimal coordinate change (or diffeomorphism); we can denote $\bar{\xi} = \partial\xi = \partial_\mu\xi^\alpha$ (itself noted v_ξ in Chap. 12 of Ref. [97], or Ξ in Chap. 15 of Ref. [96]). The first relation above shows that $c(\boldsymbol{u})$ cancels the Lorentz anomaly of the bare effective functional $W = W(e,A)$, while the second relation implies, by (linear, infinitesimal version of) Eq. (162), that the transformation of the second kind of dressed effective functional $W^{\boldsymbol{u}} = W(g,\Gamma)$ is $\delta_{\bar{\xi}}W(g,\Gamma) = -a(\bar{\xi}; \Gamma(g))$, which is just the Einstein anomaly; explicit computation shows it to relate to the nonconservation the effective EM tensor, $\nabla_\mu\langle T^{\mu\nu}\rangle \neq 0$. We see the anomaly seesaw mechanism at play [106]. Compare Eqs. (163) and (164) to Eqs. (12.469), (12.470), and (12.473)–(12.475) in Ref. [97], and to Eqs. (15.49)–(15.64) of Ref. [96].

Let us observe that the DFM extension to higher gauge theories features the same logic regarding anomaly cancellation and seesaw mechanism; we shall detail this in a forthcoming work [107]. Let us further mention that we have recently presented the formal development of invariant path-integral quantization in the full gRGFT setting, together with the corresponding automatic anomaly cancellation mechanism and the seesaw mechanism for anomalies, in Ref. [108], to which we refer the interested reader for further details. These results provide further support for the general framework based on the DFM advocated here.

We conclude the present work with perspectives on further developments and applications.

V. CONCLUSION

In line with the program developed in Ref. [2], we have motivated the notion of relational quantization, achieved via the DFM, by analyzing the case of (NR) mechanics: Framing it as a 1D gRGFT, MFT, thereby generalizing the so-called "parametrized" approach, we showed that its dressed, relational reformulation yields the well-known formulation when the clock field assumes the role of a dressing field. It follows that standard QM is a case of dressed, relational quantization of MFT. Having ended with the above general outline of relational quantization for gRGFTs, in subsequent works we shall stress test it via applications to diverse models. As a simplest case, we shall perform first the relational quantization of scalar electrodynamics, then of the Abelian Higgs model. It shall be a stepping stone to the relational quantization of the electroweak (EW) model, which shall make contact with (and perhaps encompass) a closely related approach known as the Fröhlich-Morchio-Strocchi (FMS) mechanism [109–112]: Both the DFM and FMS approaches bypass the notion of spontaneous symmetry breaking [77,78]. This invites the analysis of the issue of the interactions between relational quantization and renormalization (e.g., Ref. [113] for the EW model), which will be a separate contribution.

Relational quantum gravity. The latter is a key input to our main goal of developing RQG, at first phenomenologically. Indeed, the PI (154) could at least be applied to effective general-relativistic theories, notably models where gravity couples with matter modeled as a dust fluid. There, we will make contact notably with the literature on "scalar coordinatization" of GR, e.g., Refs. [47,114–119]—which we have shown to be a special case of the DFM in Refs. [2,54] (and where we derive "relational Einstein equations," applied to galaxy rotation curves in Ref. [120])—as well as with FMS approaches to QG [121]. Models with matter as dust notably apply to cosmology, so we shall tackle relational quantum cosmology: It will be a case of relational MFT developed here, the relational minisuperspace being a case of dressed MFS Φ^{v}. RQG, in a more fundamental guise, including fermionic matter—thus approached via Cartan geometry [104]—will be investigated next.

ACKNOWLEDGMENTS

We thank Philipp Berghofer for a careful reading of the manuscript and useful feedback. J.T.F. was supported by the Austrian Science Fund (FWF) [P 36542] and by the Czech Science Foundation (GAČR), Grant No. GA24-10887S. L.R. was supported by the GrIFOS research project, funded by the Ministry of University and Research (MUR, Ministero dell'Università e della Ricerca, Italy), PNRR Young Researchers funding program, MSCA Seal of Excellence (SoE), CUP E13C24003600006, ID SOE2024_0000103, of which this paper is part.

DATA AVAILABILITY

There are no publicly available research data or software supporting this manuscript. Requests for further information or data should be sent to the authors.

APPENDIX A: COVARIANT PHASE-SPACE FORMALISM FOR MFT

This Appendix makes explicit the relation between the present formulation of MFT and the covariant phase space and edge-mode frameworks commonly used in gauge theories and generally covariant systems.

In the "covariant phase-space" formalism for gRGFT, alluded to in the main text, one key objective is to define a symplectic phase space for field theory that is invariant under the local symmetries (diffeos and gauge groups)—This is the explicit intent of the original literature [see, e.g., Refs. [9–12], also Ref. [13] for a review and discussion of related formalisms (Hamiltonian, multisymplectic, etc.)].

The role of the symplectic manifold, the phase space, is played by $\mathcal{M}_{\mathcal{S}}$, which then needs to be endowed with a symplectic 2-form. To obtain the latter, one first defines the *presymplectic potential* as the integral of the presymplectic current over a codimension 1 submanifold $\Sigma \subset M$, with $\dim M = n$: $\boldsymbol{\theta}_\Sigma := \langle \boldsymbol{\theta}, \Sigma\rangle \in \Omega^1(\Phi, \mathbb{R})$. Then, one defines the $\boldsymbol{d}$-closed 2-form $\boldsymbol{\Theta} := \boldsymbol{d}\boldsymbol{\theta} \in \Omega^2(\Phi, \Omega^{n-1}(M))$, and the corresponding $\boldsymbol{\Theta}_\Sigma = \langle \boldsymbol{\Theta}, \Sigma\rangle = \boldsymbol{d}\boldsymbol{\theta}_\Sigma \in \Omega^2(\Phi, \mathbb{R})$. Both $\boldsymbol{\theta}_\Sigma$ and $\boldsymbol{\Theta}_\Sigma$ are then considered restricted on the subbundle $\mathcal{S}$. The 2-form is a presymplectic form if $\ker \boldsymbol{\Theta}_\Sigma = \Gamma(V\mathcal{S})$, i.e., if $\boldsymbol{\Theta}_\Sigma \in \Omega^2_{\mathbf{basic}}(\mathcal{S})$, in which case it induces (comes from) a form $\tilde{\boldsymbol{\Theta}}_\Sigma \in \Omega^2(\mathcal{M}_{\mathcal{S}}, \mathbb{R})$—so that $\boldsymbol{\Theta}_\Sigma = \pi^\star \tilde{\boldsymbol{\Theta}}_\Sigma$. The latter is $\boldsymbol{d}$-closed by naturality of $\boldsymbol{d}$, $[\boldsymbol{d}, \pi^\star] = 0$, and s.t. $\ker \tilde{\boldsymbol{\Theta}}_\Sigma = 0$, so it is symplectic: One ends up with the covariant phase space $(\mathcal{M}_{\mathcal{S}}, \tilde{\boldsymbol{\Theta}}_\Sigma)$ for the field theory over the region Σ.

This program encounters obstruction the moment $\boldsymbol{\Theta}_\Sigma$ is not basic on $\mathcal{S}$, which is typically the case in gRGFT: It fails to be horizontal, its verticality property involving terms at a codimension 2 boundary $\partial\Sigma$, a.k.a. "corner." One must then find ways to restore horizontality, thus basicity, of $\boldsymbol{\Theta}_\Sigma$. If the boundary is asymptotic (at infinity), it is enough to impose fall-off conditions on the fields ϕ. If $\partial\Sigma$ is at finite distance, boundary conditions are unnatural, and a typical strategy involves the *ad hoc* introduction of so-called edge modes; d.o.f. confined to $\partial\Sigma$ whose gauge transformations are tuned to cancel the corner terms [122] (see, e.g., Refs. [37,49–51,53,58,59,123–125]). As shown in Refs. [24,126,127], this approach is both streamlined and conceptually clarified once understood to be but an instance of the DFM: "edge modes" are just *ad hoc* dressing fields. However, the DFM stresses that they must be built from the existing field d.o.f. of the theory—rather than introduced by fiat as is always done in this literature—allowing for a relational understanding of the invariance achieved via the DFM, as expressed in the main text and detailed in Ref. [2].

A different use case of the covariant phase-space formalism is the definition of conserved Noether charges associated with local symmetries, together with their Poisson bracket induced by $\boldsymbol{\Theta}_\Sigma$. First, a conserved Noether current $(n-1)$-form is defined from the (quasi)invariance of the Lagrangian under the local symmetry: From the variational principle (67) and $\boldsymbol{L}_{\chi^v} L = \iota_{\chi^v}\boldsymbol{d}L = a(\chi;\phi) = d\beta(\chi;\phi)$, with χ the infinitesimal gauge parameter, one defines the Noether current as $J(\chi;\phi) := \iota_{\chi^v}\boldsymbol{\theta} - \beta(\chi;\phi)$ [128] satisfying $dJ(\chi;\phi) = -\iota_{\chi^v}\boldsymbol{E}$ and thus being d-closed on shell. The Noether charge is then $Q_\Sigma(\chi;\phi) := \langle J(\chi;\phi), \Sigma\rangle$. Furthermore, one finds, either by explicit computations or by deduction from its d exactness on shell together with the Poincaré lemma, that $J(\chi;\phi) = dq(\chi;\phi) + E(\chi;\phi)$. Meaning that the Noether charges are corner terms on shell: $Q_\Sigma(\chi;\phi)_{|\mathcal{S}} = \langle q(\chi;\phi), \partial\Sigma\rangle$ [see Eq. (5.58) in Ref. [126] and Eq. (3.6) in Ref. [127] for charges of internal gauge groups, and Eq. (207) in Ref. [24] for charges of diffeomorphisms).

The Poisson bracket of charges is defined to be $\{Q_\Sigma(\chi;\phi), Q_\Sigma(\chi';\phi)\} := \boldsymbol{\Theta}_\Sigma(\chi^v, \chi'^v)$, and it is found to be, on shell, a central extension of the gauge Lie algebra: $\{Q_\Sigma(\chi;\phi), Q_\Sigma(\chi';\phi)\} = Q_\Sigma([\chi,\chi'];\phi) + \mathscr{C}(\lfloor X, Y\rfloor;\phi)$, with $\mathscr{C}(\lfloor X, Y\rfloor;\phi)$ a 2-cocycle of the gauge Lie algebra whose expression depends on L and $\boldsymbol{\theta}$ [see Eq. (5.62) of Ref. [126] for the internal gauge group case and Eq. (224) of Ref. [24] for diffeomorphisms].

With these background notions in place, let us now quickly work out the covariant phase-space structure of MFT. The first thing to notice is that in MFT there can be no Noether charges of $\mathrm{Diff}(I)$ on shell, since there is no corner in dimension 1, so that the Poisson bracket will be trivial on shell. Indeed, by Eqs. (73) and (74), we have the horizontality of $\boldsymbol{E}$ (75), meaning that the Noether current 0-form is $J(X;\phi) \equiv 0$—as it obviously cannot be d exact. Correspondingly, for $\Sigma = \{\tau_0\} \in I$ a 0-dim (codimension 1) submanifold, on which integration reduces to the evaluation operation: $Q_\Sigma(X;\phi) := \langle J(X;\phi), \Sigma\rangle = \int_\Sigma J(X;\phi) = \mathrm{ev}_{\tau_0} J(X;\phi) = J(X;\phi(\tau_0)) \equiv 0$.

Toward computing the Poisson bracket, and more importantly, later, the gauge transformation of $\boldsymbol{\Theta}_\Sigma$, we need its verticality property. We obtain it in two ways: *First*, from the infinitesimal equivariance and verticality of θ [Eqs. (72)–(75)] and from the variational principle (67), we have

$$\begin{aligned}\iota_{X^v}\boldsymbol{\Theta} &= \iota_{X^v}\boldsymbol{d}\boldsymbol{\theta} = \boldsymbol{L}_{X^v}\boldsymbol{\theta} - \boldsymbol{d}\iota_{X^v}\boldsymbol{\theta} = \mathfrak{L}_X\boldsymbol{\theta} - \boldsymbol{d}(\iota_X L)\\ &= \iota_X d\boldsymbol{\theta} + d\iota_X\boldsymbol{\theta} - \iota_X\boldsymbol{d}L = \iota_X d\boldsymbol{\theta} - \iota_X(\boldsymbol{E} + d\boldsymbol{\theta}) = -\iota_X\boldsymbol{E},\end{aligned} \tag{A1}$$

where $\iota_X \boldsymbol{\theta} = 0$ since $\boldsymbol{\theta}$ is a 0-form on I. *Second*, and more simply, one may use $\boldsymbol{d}^2 L = 0 = \boldsymbol{d}\boldsymbol{E} + d\boldsymbol{\Theta}$, which yields, by the horizontality (75) and infinitesimal equivariance (72) of $\boldsymbol{E}$,

$$d\iota_{X^v}\boldsymbol{\Theta} = \iota_{X^v} d\boldsymbol{\Theta} = -\iota_{X^v}\boldsymbol{d}\boldsymbol{E} = -\boldsymbol{L}_{X^v}\boldsymbol{E} - \boldsymbol{d}\iota_{X^v}\boldsymbol{E} = -\mathfrak{L}_X \boldsymbol{E} = -d\iota_X \boldsymbol{E} \Rightarrow \iota_{X^v}\boldsymbol{\Theta} = -\iota_X \boldsymbol{E}, \quad \text{(A2)}$$

where we use that $\boldsymbol{E}$ is a top form on I, so $d\boldsymbol{E} = 0$, and we can conclude because $\boldsymbol{\Theta}$ and $\iota_X \boldsymbol{E}$ are 0-forms on I. From this, and the horizontality of $\boldsymbol{E}$, it is immediate that

$$\boldsymbol{\Theta}(X^v, Y^v) = \iota_{Y^v}\iota_{X^v}\boldsymbol{\Theta} = -\iota_X \iota_{Y^v}\boldsymbol{E} = 0. \quad \text{(A3)}$$

The triviality of the Poisson bracket $\{Q_\Sigma(X;\phi), Q_\Sigma(Y;\phi)\} := \boldsymbol{\Theta}_\Sigma(X^v, Y^v) = 0$ follows, as expected.

The verticality property (75) of $\boldsymbol{\theta}$ shows that it fails to be basic, even on shell, i.e., on $\mathcal{S}$. It is clear given its **Diff**(I) transformation (76), from which one immediately deduces that of $\boldsymbol{\theta}_\Sigma$:

$$(\boldsymbol{\theta}_\Sigma)^{\boldsymbol{\psi}} = \boldsymbol{\theta}_\Sigma + \langle \iota_{\boldsymbol{d}\boldsymbol{\psi}\circ\boldsymbol{\psi}^{-1}} L, \Sigma\rangle. \quad \text{(A4)}$$

The presymplectic potential failing to be basic on $\mathcal{S}$, it does not induce a symplectic potential on $\mathcal{M}_\mathcal{S}$. Surprisingly, this does not imply the same for the presymplectic form. Indeed, we compute geometrically, via Eq. (18) and using Eqs. (A2) and (A3), the gauge transformation of $\boldsymbol{\Theta}$ to be

$$\begin{aligned}
\boldsymbol{\Theta}^{\boldsymbol{\psi}}(\mathfrak{X}, \mathfrak{Y}) &:= \Xi^\star \boldsymbol{\Theta}(\mathfrak{X}, \mathfrak{Y}) = \boldsymbol{\Theta}(\Xi_\star \mathfrak{X}, \Xi_\star \mathfrak{Y}) \\
&= \boldsymbol{\Theta}(R_{\boldsymbol{\psi}\star}(\mathfrak{X} + \{\boldsymbol{d}\boldsymbol{\psi}\circ\boldsymbol{\psi}^{-1}(\mathfrak{X})\}^v), R_{\boldsymbol{\psi}\star}(\mathfrak{Y} + \{\boldsymbol{d}\boldsymbol{\psi}\circ\boldsymbol{\psi}^{-1}(\mathfrak{Y})\}^v)) \\
&= R^\star_{\boldsymbol{\psi}}\boldsymbol{\Theta}(\mathfrak{X} + \{\boldsymbol{d}\boldsymbol{\psi}\circ\boldsymbol{\psi}^{-1}(\mathfrak{X})\}^v, \mathfrak{X} + \{\boldsymbol{d}\boldsymbol{\psi}\circ\boldsymbol{\psi}^{-1}(\mathfrak{X})\}^v) \\
&= \boldsymbol{\psi}^*\Big(\boldsymbol{\Theta}(\mathfrak{X}, \mathfrak{Y}) + \boldsymbol{\Theta}(\mathfrak{X}, \{\boldsymbol{d}\boldsymbol{\psi}\circ\boldsymbol{\psi}^{-1}(\mathfrak{Y})\}^v) \\
&\quad + \boldsymbol{\Theta}(\boldsymbol{d}\boldsymbol{\psi}\circ\boldsymbol{\psi}^{-1}(\mathfrak{X})\}^v, \mathfrak{Y}) + \cancel{\boldsymbol{\Theta}\big(\boldsymbol{d}\boldsymbol{\psi}\circ\boldsymbol{\psi}^{-1}(\mathfrak{X})\}^v, \boldsymbol{d}\boldsymbol{\psi}\circ\boldsymbol{\psi}^{-1}(\mathfrak{Y})\}^v\big)}\Big) \\
&= \boldsymbol{\psi}^*(\boldsymbol{\Theta}(\mathfrak{X}, \mathfrak{Y}) + \iota_{\mathfrak{X}}\, \iota_{\boldsymbol{d}\boldsymbol{\psi}\circ\boldsymbol{\psi}^{-1}(\mathfrak{Y})}\boldsymbol{E} - \iota_{\mathfrak{Y}}\, \iota_{\boldsymbol{d}\boldsymbol{\psi}\circ\boldsymbol{\psi}^{-1}(\mathfrak{X})}\boldsymbol{E}),
\end{aligned}$$

which finally yields

$$\boldsymbol{\Theta}^{\boldsymbol{\psi}} = \boldsymbol{\psi}^*(\boldsymbol{\Theta} - \iota_{\boldsymbol{d}\boldsymbol{\psi}\circ\boldsymbol{\psi}^{-1}}\boldsymbol{E}) \quad \text{and} \quad (\boldsymbol{\Theta}_\Sigma)^{\boldsymbol{\psi}} = \boldsymbol{\Theta}_\Sigma - \langle \iota_{\boldsymbol{d}\boldsymbol{\psi}\circ\boldsymbol{\psi}^{-1}}\boldsymbol{E}, \Sigma\rangle. \quad \text{(A5)}$$

Thus, $\boldsymbol{\Theta}_\Sigma \in \Omega^2_{\text{basic}}(\mathcal{S})$ so $\boldsymbol{\Theta}_\Sigma = \pi^\star\tilde{\boldsymbol{\Theta}}_\Sigma$, with $\tilde{\boldsymbol{\Theta}}_\Sigma \in \Omega^2(\mathcal{M}_\mathcal{S})$, and $(\mathcal{M}_\mathcal{S}, \tilde{\boldsymbol{\Theta}}_\Sigma)$, is the covariant phase space of MFT.

As final remarks, consider the relation of the covariant phase-space formalism to objects of the standard symplectic formalism in the case of the standard NR Lagrangian discussed in Sec. III C. We have that

$$\iota_{X^v}\boldsymbol{\theta} = \theta(\iota_{X^v}\boldsymbol{d}\phi;\phi) = \theta(\mathfrak{L}_X\phi;\phi) = \theta(\iota_X d\phi;\phi) = \iota_X\bar{\theta}, \quad \text{(A6)}$$

where $\bar{\theta} = \theta(d\phi;\phi) = p_\alpha d\phi^\alpha = \langle p_x, dx\rangle + p_t dt$ is the Tautological form, or Liouville-Poincaré 1-form, on the configuration spacetime $\mathscr{C}$, while $\tilde{\theta} := \langle p_x, dx\rangle$ is that of the configuration space Q (a.k.a. the standard symplectic potential). Since we have established that Eq. (93) holds, given the constraint (90), we have that the action functional can be written as $S = \int_i \bar{\theta}$. We also have that the generalized Hamiltonian vanishes identically: $\bar{H} := \bar{\theta} - L = 0$. A feature typical of general-relativistic theories (otherwise called "parametrized theories"); GR, in particular, where it leads to the "problem of time" in its canonical analysis, a version of which we discussed in Sec. III B. The covariant symplectic 2-form is here $\boldsymbol{\Theta} = \boldsymbol{d}\boldsymbol{\theta} = \boldsymbol{d}p_\alpha\, \boldsymbol{d}\phi^\alpha = \langle \boldsymbol{d}p_x, \boldsymbol{d}x\rangle + \boldsymbol{d}p_t\, \boldsymbol{d}t$, reminiscent of the standard symplectic 2-form $\tilde{\Theta} = d\tilde{\theta} = \langle dp_x, dx\rangle$ on T^*Q.

By Eq. (132), or the DFM rule of thumb, we get that for the clock field as dressing field the dressed symplectic potential and 2-form are $\boldsymbol{\theta}^{\boldsymbol{v}} = \theta(\boldsymbol{d}\phi^{\boldsymbol{v}};\phi^{\boldsymbol{v}}) = \langle p_{\bar{x}}, \boldsymbol{d}\bar{x}\rangle$ and $\boldsymbol{\Theta}^{\boldsymbol{v}} = \boldsymbol{d}\boldsymbol{\theta}^{\boldsymbol{v}} =$

$\langle \boldsymbol{d}p_{\bar{x}}, \boldsymbol{d}\bar{x}\rangle$ on $\Phi^{\boldsymbol{v}} \simeq \mathcal{M} \simeq \mathcal{P}(\mathscr{C}) \to \mathcal{P}(Q)$. One recognizes the close structural analogy with $\tilde{\theta}$ and $\tilde{\Theta}$ on T^*Q.

It is interesting to remark that the standard symplectic formalism for mechanics on T^*Q (deparametrized) was the motivation for the covariant phase-space approach to GFT (and gRGFT) in the original literature [9–12]. Applying it to (NR) MFT, understood as a model of gRGFT, and establishing the correspondence with the standard approach brings us full circle back to the origins.

APPENDIX B: LIST OF SYMBOLS

This Appendix collects, in Table III, the main mathematical notations adopted in the paper.

TABLE III. Main mathematical notations.

Object	Symbol
(Mechanical) field space	Φ
Structure group/algebra of Φ	$\mathrm{Diff}(I)/\mathfrak{diff}(I)$
Structure group/algebra element	ψ/X
(Moduli) base space of Φ	$\mathcal{M}$
Point of $\Phi/\mathcal{M}$	$\phi = \{t, x\}/[\phi]$
(1D) parameter space for ϕ	I
Automorphism group/algebra	$\mathbf{Aut}(\Phi)/\mathfrak{aut}(\Phi)$
Element of $\mathbf{Aut}_{(v)}(\Phi)$	Ξ
Vertical automorphism group/algebra	$\mathbf{Aut}_v(\Phi)/\mathfrak{aut}_v(\Phi)$
Gauge group/algebra	$\mathbf{Diff}(I)/\mathfrak{diff}(I)$
Element of $\mathbf{Diff}(I)/\mathfrak{diff}(I)$	$\boldsymbol{\psi}/\boldsymbol{X}$
Diffeomorphism group/algebra of $\mathcal{M}$	$\mathbf{Diff}(M)/\mathfrak{diff}(\mathcal{M})$
Tangent space/tangent vector fields on Φ	$T\Phi/\Gamma(T\Phi)$
Differential forms on $\Phi/\mathcal{M}$	$\Omega^\bullet(\Phi)/\Omega^\bullet(\mathcal{M})$
Right action of $\mathrm{Diff}(I)$ on Φ	R_ψ
Element of $\Gamma(T\Phi)/\Omega^\bullet(\Phi)/\Omega^\bullet(\mathcal{M})$	$\mathfrak{X}/\boldsymbol{\alpha} = \alpha(\wedge^\bullet \boldsymbol{d}\phi; \phi)/\bar{\boldsymbol{\alpha}}$
de Rham differential on I/on Φ	$d/\boldsymbol{d}$
Pullback (pushforward) on I/Φ by a map f/F	$f^*\ (f_*)/F^\star\ (F_\star)$
Gauge transformation of $\boldsymbol{\alpha}$ (via vertical automorphism)	$\boldsymbol{\alpha}^{\boldsymbol{\psi}} := \Xi^\star\boldsymbol{\alpha}$
Lie derivative on I/on Φ	$\mathfrak{L}_X/\boldsymbol{L}_{\mathfrak{X}}$
$\mathrm{Diff}(I)$ 1-cocycle on Φ	$C(\phi; \psi)$
$\mathfrak{diff}(I)$ 1-cocycle on Φ	$a(X; \phi)$
Principal/cocyclic connection on Φ (curvature)	$\boldsymbol{\omega}/\boldsymbol{\varpi}\ (\boldsymbol{\Omega}/\bar{\boldsymbol{\Omega}})$
Space of regions of I	$\boldsymbol{i}(I)$
Element of $\boldsymbol{i}(I)$/1-form on I	i/ω
Integration (pairing) on I	$\langle \omega, i\rangle = \int_i \omega$
Associated bundle of regions	$\mathcal{R}(I) := \Phi \times \boldsymbol{i}(I)/\sim$
Lagrangian 1-form/action on I/path integral (PI)	$L = L(\phi)/S = \int_i L/Z = Z(\phi)$
Field equations/symplectic potential	$\boldsymbol{E} = E(\boldsymbol{d}\phi; \phi)/\boldsymbol{\theta}$
Space of solutions/moduli space of solutions	$\mathcal{S}/\mathcal{M}_{\mathcal{S}}$
Extended config. space/config. space	$\mathscr{C}/Q$
Curve in $\mathscr{C}/Q$	γ/γ_q
Dressing field/dressed fields/dressed regions	$\boldsymbol{v}/\phi^{\boldsymbol{v}}/i^{\boldsymbol{v}}$
Dressing map/dressed forms	$F_{\boldsymbol{v}}/\boldsymbol{\alpha}^{\boldsymbol{v}} := F_{\boldsymbol{v}}^\star\boldsymbol{\alpha}$
Dressed Lagrangian/field equations/dressed PI	$L^{\boldsymbol{v}}/\boldsymbol{E}^{\boldsymbol{v}}/Z^{\boldsymbol{v}}$

[1] J. François and L. Ravera, On the meaning of local symmetries: Epistemic-ontological dialectics, Found. Phys. **55**, 38 (2025).
[2] J. François and L. Ravera, Geometric relational framework for general-relativistic gauge field theories, Fortschr. Phys. **73**, 2400149 (2025).
[3] J. François and L. Ravera, Dressing fields for supersymmetry: The cases of the Rarita-Schwinger and gravitino fields, J. High Energy Phys. 07 (2024) 041.
[4] J. François and L. Ravera, Unconventional supersymmetry via the dressing field method, Phys. Rev. D **111**, 125022 (2025).
[5] J. François and L. Ravera, Off-shell supersymmetry via manifest invariance, Phys. Lett. B **868**, 139633 (2025).
[6] J. François and L. Ravera, Relational supersymmetry via the dressing field method and matter-interaction supergeometric framework, Ann. Phys. **537**, e00121 (2025).
[7] P. G. Bergmann, Non-linear field theories, Phys. Rev. **75**, 680 (1949).
[8] P. A. M. Dirac, Generalized Hamiltonian dynamics, Can. J. Math. **2**, 129 (1950).
[9] E. Witten, Interacting field theory of open superstrings, Nucl. Phys. B **276**, 291 (1986).
[10] C. Crnkovic and E. Witten, Covariant description of canonical formalism in geometrical theories, in *Three Hundred Years of Gravitation*, edited by S. W. Hawking and W. Israel (Cambridge University Press, Cambridge, UK, 1987), pp. 676–684.
[11] G. J. Zuckerman, Action principles and global geometry, Conf. Proc. C **8607214**, 259 (1986).
[12] C. Crnkovic, Symplectic geometry of the covariant phase space, superstrings and superspace, Classical Quantum Gravity **5**, 1557 (1988).
[13] F. Gieres, Covariant canonical formulations of classical field theories, SciPost Phys. Lect. Notes **77**, 1 (2021).
[14] This appears to be enough to tame the internal gauge groups of gauge field theory (GFT) and delivers quantum GFT, or gauge QFT, but it comes short for general-relativistic FT. So, no quantum theory of gravity is established, let alone a full quantum gRGFT framework.
[15] A. Zee, *Quantum Field Theory in a Nutshell* (Princeton University Press, Princeton, NJ, 2010), 2nd ed.
[16] C. Lanczos, *The Variational Principles of Mechanics*, *Dover Books on Physics* (Dover Publications Inc., New York, NY, 1970, 2012), 4th ed.
[17] J. Struckmeier, Hamiltonian dynamics on the symplectic extended phase space for autonomous and non-autonomous systems, J. Phys. A: Math. Gen. **38**, 1257 (2005).
[18] C. Rovelli and F. Vidotto, *Covariant Loop Quantum Gravity: An Elementary Introduction to Quantum Gravity and Spinfoam Theory* (Cambridge University Press, Cambridge, UK, 2014).
[19] C. Rovelli, Partial observables, Phys. Rev. D **65**, 124013 (2002).
[20] B. Dittrich, Partial and complete observables for canonical general relativity, Classical Quantum Gravity **23**, 6155 (2006).
[21] B. Dittrich, Partial and complete observables for Hamiltonian constrained systems, Gen. Relativ. Gravitation **39**, 1891 (2007).
[22] T. Thiemann, Reduced phase space quantization and Dirac observables, Classical Quantum Gravity **23**, 1163 (2006).
[23] Fewer still have argued that a better grasp of the radical paradigmatic shift of QM is key to make progress toward QG. Famously, so is for the Everett-DeWitt many world interpretation, or Rovelli's relational interpretation [25,28,129].
[24] J. François, The dressing field method for diffeomorphisms: A relational framework, J. Phys. A: Math. Theor. **57**, 305203 (2024).
[25] C. Rovelli, *Quantum Gravity, Cambridge Monographs on Mathematical Physics* (Cambridge University Press, Cambridge, UK, 2004).
[26] Fields then may be seen as carrying an "internal" index $\phi^\alpha = (x^a, t) = (x^a_i, t_{(i)})$, with $\alpha = (a, 0)$ and $a = \{1, 2, 3\}$, and $i \in \{1, \ldots, N\}$, which are representation indices for the action of H and $\mathcal{H}$.
[27] J. François and L. Ravera, Relational bundle geometric formulation of non-relativistic quantum mechanics, Fortsch. Phys. **73**, e70040 (2025).
[28] C. Rovelli, Why gauge? Found. Phys. **44**, 91 (2014).

[29] A generalization of $\mathbf{Aut}_v(\Phi) \simeq \mathbf{Diff}(I)$ may be considered to also embody this notion: the group of vertical diffeomorphisms $\mathbf{Diff}_v(\Phi) := \{\Xi \in \mathbf{Diff}(\Phi) \,|\, \pi \circ \Xi = \pi\}$ isomorphic to, or generated by, $C^\infty(\Phi, \mathrm{Diff}(I))$. The latter can be shown to be the group of bisections of the Lie groupoid $\bar{\mathbf{\Gamma}} = \Phi \rtimes \mathrm{Diff}(I) \rightrightarrows \Phi$ associated with the right action of $\mathrm{Diff}(I)$ on Φ [130–132]. This is treated in detail in Sec. 3 of Ref. [2] and Ref. [133].

[30] On the other hand, an exterior product cannot be defined on $\Omega^\bullet(\Phi, \boldsymbol{V})$, where $\boldsymbol{V}$ is merely a vector space.

[31] Actually, more generally they are given by the Nijenhuis-Lie derivative along vector-valued forms, as described in Sec. 3.2.2 of Ref. [2]. See also Ref. [133]. Indeed, vertical vector fields generated by $\mathfrak{diff}(I)$ and $\mathfrak{\mathbf{diff}}(I)$ can be understood to be $V\Phi$-valued 0-forms. See Ref. [134].

[32] J. François, Twisted gauge fields, Adv. Theor. Math. Phys. **25**, 1389 (2021).

[33] V. Guillemin and S. Sternberg, *Supersymmetry and Equivariant de Rham Theory* (Springer, Berlin, 1999).

[34] If $G = U(1)$, then $[C(\boldsymbol{\psi})](\phi) = \exp i\,[c(\boldsymbol{\psi})](\phi)$, with $[c(\boldsymbol{\psi})](\phi) := c(\phi; \boldsymbol{\psi}(\phi))$.

[35] Remark that $\{\boldsymbol{dX}\}^v$ can be seen as an element of $\Omega^1(\Phi, V\Phi)$, so $\iota_{\{\boldsymbol{dX}\}^v}$ is an algebraic derivation (of degree 0) as defined in Ref. [134].

[36] In some works on the covariant phase-space literature of gRGFT [58,135–138], a so-called "anomaly operator" Δ_X was introduced and defined as $\Delta_X := \boldsymbol{L}_{X^v} - \mathfrak{L}_X - \iota_{\{\boldsymbol{dX}\}^v}$. See how the above clarifies the geometric meaning of this operator, here appearing in the context of MFT. We observe that Δ_X can only be nonzero on the field space Φ of theories admitting background nondynamical structures or fields "breaking" gauge and/or diffeomorphism covariance, i.e., theories that fundamentally fail to comply with the core physical (symmetry) principles of gRGFT.

[37] W. Donnelly and L. Freidel, Local subsystems in gauge theory and gravity, J. High Energy Phys. 09 (2016) 102.

[38] It is actually the defining representation of $\mathrm{Diff}(I)$ as a (Lie) pseudogroup [139].

[39] P. G. Bergmann, Gauge-invariant variables in general relativity, Phys. Rev. **124**, 274 (1961).

[40] P. G. Bergmann and A. Komar, The coordinate group symmetries of general relativity, Int. J. Theor. Phys. **5**, 15 (1972).

[41] D. C. Salisbury and K. Sundermeyer, The realization in phase space of general coordinate transformations, Phys. Rev. D **27**, 740 (1983).

[42] The quotes here are intended to remind that it is incorrect to identify spacetime with M: Not only because spacetime is modeled by a Lorentzian manifold (M, g), but more crucially because M is not even the bare manifold of true physical "events," or of "spacetime points." For a general discussion of this point in the context of gRGFT, see Refs. [1,2]; see also Refs. [54,140]. We discuss its equivalent in MFT next, in Sec. III B.

[43] With I understood to be endowed with its "standard" metric $\mathsf{g} : TI \times TI \to \mathbb{R}^+$, $(X, Y) \mapsto \mathsf{g}(X, Y) = \bar{X}\bar{Y}$ for $X = \bar{X}\frac{\partial}{\partial\tau}$ and $Y = \bar{Y}\frac{\partial}{\partial\tau}$. This metric may be loosely said "canonical" since $TI \simeq \mathbb{R}$ as vector spaces.

[44] R. Rynasiewicz, Newton's views on space, time, and motion, in *The Stanford Encyclopedia of Philosophy*, edited by E. N. Zalta (Metaphysics Research Lab, Stanford University, 2022), Spring 2022 ed.

[45] The only caveat is that in nonrelativistic MFT one is able to define a distinguished class of "good" clocks. More on this later.

[46] C. J. Isham, *Canonical Quantum Gravity and the Problem of Time* (Springer Netherlands, Dordrecht, 1993), pp. 157–287.

[47] K. V. Kuchar, Time and interpretations of quantum gravity, Int. J. Mod. Phys. D **20**, 3 (2011).

[48] K. Thebault, The problem of time, in *The Routledge Companion to Philosophy of Physics*, edited by Eleanor Knox and Alastair Wilson (Routledge, 2022).

[49] A. Speranza, Local phase space and edge modes for diffeomorphism-invariant theories, J. High Energy Phys. 02 (2018) 021.

[50] M. Geiller, Lorentz-diffeomorphism edge modes in 3d gravity, J. High Energy Phys. 02 (2018) 029.

[51] L. Freidel, M. Geiller, and D. Pranzetti, Edge modes of gravity. Part I. Corner potentials and charges, J. High Energy Phys. 11 (2020) 026.

[52] V. Kabel and W. Wieland, Metriplectic geometry for gravitational subsystems, Phys. Rev. D **106**, 064053 (2022).

[53] L. Ciambelli, From asymptotic symmetries to the corner proposal, PoS **(Modave2022)**, 002 (2022).
[54] J. François and L. Ravera, Spacetime boundaries do not break diffeomorphism and gauge symmetries, Phys. Rev. D **112**, 125029 (2025).
[55] One only needs to show that $\langle d(mv) + \frac{\delta V}{\delta x} dt, v\rangle = d(\frac{m}{2}\langle v, v\rangle + V) - \frac{\delta V}{\delta t} dt$. The same computation is needed to prove the horizontality of $\boldsymbol{E}$, next.
[56] J. Polchinski, *String Theory. Vol. 1: An Introduction to the Bosonic String*, *Cambridge Monographs on Mathematical Physics* (Cambridge University Press, Cambridge, UK, 2007), p. 12.
[57] In general, there exists $\mathcal{N} = \sigma(\mathcal{M})$ iff the field space bundle Φ is trivial. The fact that no global gauge fixing exists for $SU(n)$-gauge theories over compact regions of spacetime is known as the Gribov-Singer obstruction (or Gribov ambiguity) [141–143].
[58] V. Chandrasekaran and A. Speranza, Anomalies in gravitational charge algebras of null boundaries and black hole entropy, J. High Energy Phys. 01 (2021) 137.
[59] A. J. Speranza, Ambiguity resolution for integrable gravitational charges, J. High Energy Phys. 07 (2022) 029.
[60] V. Chandrasekaran, É. Flanagan, I. Shehzad, and A. J. Speranza, A general framework for gravitational charges and holographic renormalization, Int. J. Mod. Phys. A **37**, 2250105 (2022).
[61] W. Donnelly and S. B. Giddings, Diffeomorphism-invariant observables and their nonlocal algebra, Phys. Rev. D **93**, 024030 (2016).
[62] W. Donnelly and S. B. Giddings, Observables, gravitational dressing, and obstructions to locality and subsystems, Phys. Rev. D **94**, 104038 (2016).
[63] S. B. Giddings and A. Kinsella, Gauge-invariant observables, gravitational dressings, and holography in AdS, J. High Energy Phys. 11 (2018) 074.
[64] S. B. Giddings, Gravitational dressing, soft charges, and perturbative gravitational splitting, Phys. Rev. D **100**, 126001 (2019).
[65] S. B. Giddings and S. Weinberg, Gauge-invariant observables in gravity and electromagnetism: Black hole backgrounds and null dressings, Phys. Rev. D **102**, 026010 (2020).
[66] V. Chandrasekaran, R. Longo, G. Penington, and E. Witten, An algebra of observables for de Sitter space, J. High Energy Phys. 02 (2023) 082.
[67] K. Jensen, J. Sorce, and A. J. Speranza, Generalized entropy for general subregions in quantum gravity, J. High Energy Phys. 12 (2023) 020
[68] S. Carrozza, S. Eccles, and P. Hoehn, Edge modes as dynamical frames: Charges from post-selection in generally covariant theories, SciPost Phys. **17**, 048 (2024).
[69] C. Goeller, P. A. Hoehn, and J. Kirklin, Diffeomorphism-invariant observables and dynamical frames in gravity: Reconciling bulk locality with general covariance, arXiv:2206.01193.
[70] A. J. Speranza, Geometrical tools for embedding fields, submanifolds, and foliations, arXiv:1904.08012 [gr-qc].
[71] L. Ciambelli, R. G. Leigh, and P. C. Pai, Embeddings and integrable charges for extended corner symmetry, Phys. Rev. Lett. **128**, 171302 (2022).
[72] Dressed fields $\phi^{\boldsymbol{v}}$ are then "relational Dirac variables," or "complete observables" in the terminology of Refs. [19,144].
[73] In this 1D context, one may equivalently say that $\phi^{\boldsymbol{v}}$ are parametrized by, or evolve against, $i^{\boldsymbol{v}}$.
[74] Remember that in that definition of $\bar{i} = t(i)$ as a $\mathcal{T}$-valued functional on $\Phi \times \boldsymbol{i}(I)$, $\mathrm{Diff}(I)$ acts via $\bar{R}^{\star}_{\psi}\bar{i}$ with $\bar{R}_{\psi}$ defined by Eq. (45), i.e., not only on t—i.e., by R_{ψ} as one would posit intuitively—but also on the domain $i \in \boldsymbol{i}(I)$, according to Eq. (106).
[75] Notice that, as stated in Sec. III B and reiterated in Sec. IV A 1, there is no "boundary problem"—and no "edge modes" on the bare boundary ∂i are needed to make sense of the physics at play.
[76] P. Berghofer and J. François, Dressing vs. fixing: On how to extract and interpret gauge-invariant content, Found. Phys. **54**, 72 (2024).
[77] P. Berghofer, J. François, S. Friederich, H. Gomes, G. Hetzroni, A. Maas, and R. Sondenheimer, *Gauge Symmetries, Symmetry Breaking, and Gauge-Invariant Approaches, Elements in the Foundations of Contemporary Physics* (Cambridge University Press, Cambridge, UK, 2023).

[78] J. François, Artificial versus substantial gauge symmetries: A criterion and an application to the electroweak model, Philos. Sci. **86**, 472 (2019).

[79] This is exactly the angle adopted by the "edge-modes" literature (following Ref. [37]): There *ad hoc* dressing fields are called edge modes and residual transformations of the second kind [$\mathrm{Diff}(J)$] are coined "surface/corner symmetries" and claimed to be "physical symmetries."

[80] As a matter of fact, in the gauge theoretic setup this has been shown to happen even when the dressing field is not *ad hoc* and still $\phi^{\varphi} = \phi$ follows (this is what is meant by the "at best" caveat): See the treatment via DFM of (pure) gauge gravity in Sec. 4.3.1.b of Ref. [126], where the (co)tetrad field is a (field-dependent) Lorentz dressing field and the Lorentz gauge group [analog of $\mathrm{Diff}(I)$] is eliminated but the group of transformations of the second kind is exactly the gauge group of general coordinate transformations [analog of $\mathrm{Diff}(J)$].

[81] In that respect, we again draw attention to the edge-mode literature, and related, which by now has attracted non-negligible attention, but also to the literature on Metric-Affine and/or Poincaré gravity [145].

[82] Such groups would be, from the perspective of the bare MFT on I, "internal" (gauge) groups acting on the fields $\phi = (x, t)$. The gauge principle would have required covariance under those, constraining the form of the bare Lagrangian $L(\phi)$, leading to Eq. (86).

[83] Remark that the free case allows to relax the covariance requirement slightly: For $m\bar{a}' = 0$ to hold, it is enough that $\partial_{\bar{t}}\varphi = r$, with $r \neq 0$ (the ratio of clock rates) constant. This leads to an affine relation among clocks: $t = \varphi(t') = r\,t' + s$. Such rescalings feature in generalizations of the Galilean group, e.g., the Schrödinger group.

[84] The argument that it could be ascertained via the fact that when it holds the equation of motion $ma = F$ of x reduces to the familiar $m\ddot{x} = F$—resembling the above discussion of "inertial clocks"—does not hold since $\ddot{x}$ is not an observable either.

[85] For the philosophically minded reader, we remark that this has unmistakable ontic structural realist undertones, and is especially strongly reminiscent of Eddington's group theoretic "moderate" structural realism [146,147]—see also Secs. 4.5 and 4.6 of Ref. [148]—according to which physical objects and their network of relations come as a (metaphysical) package, analogously to the elements of a group and their relations: A group element is only defined by its "position" relative to others with respect to the abstract group structure (i.e., the composition law) relating them. Analogously, the precise position of a physical object within the (lawful) relational network is constitutive of its "identity" and properties. Objects are then defined as nodes within the network and undetachable from it.

[86] As is, it holds, in particular, for *ad hoc* dressing fields—e.g., *edge modes*—but as discussed in Sec. IV B 3, those typically lead to a wrongheaded physical picture.

[87] For example, some 1D MFTs may behave like conformal field theories and exhibit an anomaly proportional to the Schwarzian derivative of $\psi \in \mathrm{Diff}(I)$.

[88] The manifold M, which we remind is actually unphysical and drops out of the physical picture, as per Einstein's point-coincidence argument, in the same way I is unphysical and drops out in MFT as argued in Sec. III B (see, e.g., Refs. [1,2,54]).

[89] See also Ref. [24] for the case of general-relativistic theories, i.e., only $\mathrm{Diff}(M)$, and applications of the bundle geometry of their field space to their covariant phase-space formalism.

[90] These were essential steps toward the application of the DFM, as explained in Sec. IV A, leading to an invariant relational formulation of gRGFTs, sketched below.

[91] We write "(gR)" since although standard PI for GR, or general relativistic theories, have been studied, they did not yet lead to satisfying (finite, renormalizable) quantum theories, contrary to the case of GFTs encompassing the standard model.

[92] Meaning that "dressed regions" $U^{\boldsymbol{v}} := \boldsymbol{v}^{-1}(U)$, with $U \subset M$, are an implementation of Einstein's point-coincidence argument (see Ref. [140]).

[93] This can be seen from the following fact: Given the BRST transformation $s\phi = f((\xi, c); \phi)$ for s, the BRST operator, (ξ, c) the ghost of $\mathrm{Diff}(M) \ltimes \mathcal{H}$, and $f(_; \phi)$ a functional linear in its first argument, the DFM generically supplies the notion of *dressed ghost* $(\bar{\xi}, \bar{c}) = (\xi, c)^{(\boldsymbol{v},\boldsymbol{u})}$—with, e.g., $c^{\boldsymbol{u}} := \boldsymbol{u}^{-1}c\boldsymbol{u} + \boldsymbol{u}^{-1}s\boldsymbol{u}$ in the purely internal (e.g., Yang-Mills) case—entering the dressed BRST algebra

$s\,\phi^{(\boldsymbol{v},\boldsymbol{u})} = f((\bar{\xi},\bar{c});\phi^{(\boldsymbol{v},\boldsymbol{u})})$. In case $(\boldsymbol{v},\boldsymbol{u})$ are complete dressings for $\mathrm{Diff}(M)\ltimes\mathcal{H}$, leaving no residual transformations of the first kind, the dressed ghost vanishes $(\bar{\xi},\bar{c})=0$, so that $s\,\phi^{(\boldsymbol{v},\boldsymbol{u})}=0$ as expected. In case $(\boldsymbol{v},\boldsymbol{u})$ are dressings for a subgroup of $\mathrm{Diff}(M)\ltimes\mathcal{H}$, the dressed ghost $(\bar{\xi},\bar{c})$ is associated with the subgroup $\mathcal{K}\subset\mathrm{Diff}(M)\ltimes\mathcal{H}$ that is not eliminated via dressing, and $s\,\phi^{(\boldsymbol{v},\boldsymbol{u})} = f((\bar{\xi},\bar{c});\phi^{(\boldsymbol{v},\boldsymbol{u})})$ encodes the infinitesimal residual $\mathcal{K}$ transformations (of the first kind) of the dressed fields $\phi^{(\boldsymbol{v},\boldsymbol{u})}$. For examples of applications, e.g., to conformal Cartan geometry (including tractors and twistors), see Refs. [100,101,149,150], and to supersymmetric field theory, see Ref. [6].

[94] Otherwise known as the anomalous Ward Identity, written in the BRST formalism as $sW(\phi) = a((\xi,c);\phi)$ and defining the anomaly.

[95] M. Göckeler and T. Schücker, *Differential Geometry, Gauge Theory and Gravity*, *Cambridge Monographson Mathematical Physics* (Cambridge University Press, Cambridge, UK, 1987).

[96] L. Bonora, *Fermions and Anomalies in Quantum Field Theories, Theoretical and Mathematical Physics* (Springer, Cham, 2023), 1st ed.

[97] R. A. Bertlmann, *Anomalies in Quantum Field Theory*, International Series of Monographs on Physics (Oxford University Press, 1996), Vol. 91.

[98] The semidirect product of $\mathrm{Diff}(N)\ltimes\bar{G}$, formally analog to that of $\mathrm{Diff}(M)\ltimes\mathcal{H}$, is given by $(\varphi,\ \bar{\zeta})\cdot(\varphi',\ \bar{\zeta}') := (\varphi\circ\varphi',\ \bar{\zeta}\,(\varphi^{-1*}\bar{\zeta}'))$.

[99] This case we mentioned in Ref. [22], referring to Sec. 4.3.1.b of Ref. [126]. We remark that, there, a sort of classical analog of the seesaw mechanism for anomalies is discussed; Noether charges exchange, whereby Lorentz charges are eliminated via dressing but replaced by charges for general coordinate transformations, or $\mathrm{Diff}(M)$. This bears, in particular, on the topic of the so-called "dual" charges in loop quantum gravity (see, e.g., Refs. [151–153]), which is similarly clarified by the DFM (see Appendix G of Ref. [126]).

[100] J. Attard and J. François, Tractors and twistors from conformal Cartan geometry: A gauge theoretic approach I. Tractors, Adv. Theor. Math. Phys. **22**, 1831 (2018).

[101] J. Attard and J. François, Tractors and twistors from conformal Cartan geometry: A gauge theoretic approach II. Twistors, Classical Quantum Gravity **34**, 085004 (2017).

[102] R. W. Sharpe, Differential geometry: Cartan's generalization of Klein's Erlangen program, *Graduate Text in Mathematics* (Springer, 1996), Vol. 166.

[103] A. Cap and J. Slovak, *Parabolic Geometries I: Background and General Theory*, *Mathematical Surveys and Monographs* (American Mathematical Society, 2009), Vol. 1.

[104] J. François and L. Ravera, Cartan geometry, supergravity, and group manifold approach, Arch. Math. **60**, 243 (2024).

[105] Yet, the first published paper on the DFM [154], Sec. 4.3, discusses the possibility of extracting an $SO(r,s)$-valued dressing field out of the $GL(r+s)$-valued tetrad via an (r,s)-signature extension of the Schweinler-Wigner orthogonalization procedure [155]. One may also consult Appendix B of Ref. [156] for more details (see also footnote 12 in Ref. [78] and Sec. 4.3.2 of Ref. [127]). This "minimal dressing extraction" from the tetrad is the basis of a recent attempt to approach QG by Thiemann [157] and called there the "triangular gauge"; an unfortunate terminology given the clear conceptual and mathematical distinction between dressing and gauge fixing [76].

[106] We may remind that anomalies can be determined through the Stora-Zumino descent equations, e.g., via BRST methods (see Chap. 12 of Ref. [97] or Chap. 5 of Ref. [96]), and are 1-cocycles of the cohomologies of Lie algebras [e.g., of the gauge $\mathcal{H}$ or full covariance group $\mathrm{Diff}(M)\ltimes\mathcal{H}$]. Their "integrated," or nonlinear, version given by C, or c, is 1-cocycles of (Abelian) group cohomologies [e.g., of $\mathcal{H}$ or $\mathrm{Diff}(M)\ltimes\mathcal{H}$], and yields what has been called "global anomalies" (see, e.g., Chap. 13 of Ref. [96]). See also Ref. [32] for the first presentation of cocyclic bundle geometry and cocyclic connections, showing how it underlies (global/local) consistent gauge anomalies.

[107] There, when applied to string models, the automatic anomaly cancellation mechanism exposed above may encompass as a special case the Green-Schwarz mechanism; that is, if the 2-form B_2 can be identified as an *ad hoc* (higher) dressing field—which as a matter of fact cannot be interpreted as a

natural closed string mode, since its gauge transformation differs (and tuned specifically to cancel the anomaly).

[108] J. Francois and L. Ravera, Invariant path-integral quantization and anomaly cancellation, arXiv:2604.21004.

[109] J. Fröhlich, G. Morchio, and F. Strocchi, Higgs phenomenon without symmetry breaking order parameter, Nucl. Phys. B **190**, 553 (1981).

[110] A. Maas, Brout–Englert–Higgs physics: From foundations to phenomenology, Prog. Part. Nucl. Phys. **106**, 132 (2019).

[111] V. Afferrante, A. Maas, R. Sondenheimer, and P. Törek, Testing the mechanism of lepton compositeness, SciPost Phys. **10**, 062 (2021).

[112] A. Maas, *The Fröhlich–Morchio–Strocchi Mechanism: An Underestimated Legacy* (Springer International Publishing, Cham, 2023), pp. 177–205.

[113] E. Kraus, Renormalization of the electroweak standard model to all orders, Ann. Phys. **262**, 155 (1998).

[114] K. Kuchař, Gravitation, geometry, and nonrelativistic quantum theory, Phys. Rev. D **22**, 1285 (1980).

[115] J. Hartle and K. Kuchař, Path integrals in parametrized theories: Newtonian systems, J. Math. Phys. **25**, 57 (1984).

[116] J. D. Brown and K. Kuchař, Dust as a standard of space and time in canonical quantum gravity, Phys. Rev. D **51**, 5600 (1995).

[117] C. Rovelli, What is observable in classical and quantum gravity? Classical Quantum Gravity **8**, 297 (1991).

[118] C. Rovelli, Quantum reference systems, Classical Quantum Gravity **8**, 317 (1991).

[119] C. Rovelli, GPS observables in general relativity, Phys. Rev. D **65**, 044017 (2002).

[120] J. Franççois and L. Ravera, Raising galaxy rotation curves via dressing, Phys. Rev. D **112**, L081501 (2025).

[121] A. Maas, The Fröhlich-Morchio-Strocchi mechanism and quantum gravity, SciPost Phys. **8**, 051 (2020).

[122] In general, the verticality property of $\boldsymbol{\theta}_\Sigma$ also involves "bulk terms," integrated on Σ [see Eq. (5.65) in Ref. [126] and Eq. (240) in Ref. [24]). So, if the "edge-modes" strategy is used to restore its horizontality, these d.o.f. cannot be confined to the corner, but must also extend to the bulk.

[123] M. Geiller, Edge modes and corner ambiguities in 3d Chern–Simons theory and gravity, Nucl. Phys. B **924**, 312 (2017).

[124] L. Freidel, M. Geiller, and D. Pranzetti, Edge modes of gravity. Part II. Corner metric and Lorentz charges, J. High Energy Phys. 11 (2020) 027.

[125] L. Freidel, M. Geiller, and D. Pranzetti, Edge modes of gravity. Part III. Corner simplicity constraints, J. High Energy Phys. 01 (2021) 100.

[126] J. François, Bundle geometry of the connection space, covariant Hamiltonian formalism, the problem of boundaries in gauge theories, and the dressing field method, J. High Energy Phys. 03 (2021) 225.

[127] J. François, N. Parrini, and N. Boulanger, Note on the bundle geometry of field space, variational connections, the dressing field method, & presymplectic structures of gauge theories over bounded regions, J. High Energy Phys. 12 (2021) 186.

[128] Or as any other member of its de Rham cohomology class, adding a d-exact term $d\gamma(\chi;\phi)$.

[129] C. Rovelli, Relational quantum mechanics, Int. J. Theor. Phys. **35**, 1637 (1996).

[130] K. C. H. Mackenzie, *General Theory of Lie Groupoids and Lie Algebroids*, London Mathematical Society Lecture Notes Series (Cambridge University Press, 2005), Vol. 213.

[131] A. Schmeding and C. Wockel, The Lie group of bisections of a Lie groupoid, Ann. Global Anal. Geom. **48**, 87 (2015).

[132] J. Pierard de Maujouy, Field theory and generalised Cartan geometry, Ph.D. thesis, Université Paris Cité, Institut Mathématiques de Jussieu-Paris Rive Gauche, 2022.

[133] J. François, Note on the group of vertical diffeomorphisms of a principal bundle & its relation to the Frölicher-Nijenhuis bracket, J. High Energy Phys. 08 (2024) 40.

[134] I. Kolar, P. Michor, and J. Slovak, *Natural Operations in Differential Geometry* (Springer, Berlin, 1993).

[135] F. Hopfmüller and L. Freidel, Null conservation laws for gravity, Phys. Rev. D **97**, 124029 (2018).

[136] L. Freidel, R. Oliveri, D. Pranzetti, and S. Speziale, Extended corner symmetry, charge bracket and Einstein's equations, J. High Energy Phys. 09 (2021) 083.
[137] L. Freidel, R. Oliveri, D. Pranzetti, and S. Speziale, The Weyl BMS group and Einstein's equations, J. High Energy Phys. 07 (2021) 170.
[138] G. Odak, A. Rignon-Bret, and S. Speziale, Wald-Zoupas prescription with soft anomalies, Phys. Rev. D **107**, 084028 (2023).
[139] S. Kobayashi, *Transformation Groups in Differential Geometry* (Springer, 1972).
[140] P. Berghofer, J. François, and L. Ravera, What price fiber bundle substantivalism? On how to avoid holes in fibers, Found. Phys. **56**, 38 (2026).
[141] I. M. Singer, Some remark on the Gribov ambiguity, Commun. Math. Phys. **60**, 7 (1978).
[142] I. M. Singer, The geometry of the orbit space for non-Abelian gauge theories, Phys. Scr. **24**, 817 (1981).
[143] J. Fuchs, *The Singularity Structure of the Yang-Mills Configuration Space* (Banach Center Publications, 1997), Vol. 39, p. 287.
[144] J. Tamborino, Relational observables in gravity: A review, SIGMA **8**, 30 (2012).
[145] J. François and L. Ravera, Reassessing the foundations of metric-affine gravity, Eur. Phys. J. C **85**, 902 (2025).
[146] S. French, Scribbling on the blank sheet: Eddington's structuralist conception of objects, Stud. Hist. Philos. Sci. Part B: Stud. Hist. Philos. Mod. Phys. **34**, 227 (2003).
[147] S. French and J. Ladyman, Remodelling structural realism: Quantum physics and the metaphysics of structure, Synthese **136**, 31 (2003).
[148] S. French, *The Structure of the World: Metaphysics and Representation* (Oxford University Press, 2014).
[149] J. François, S. Lazzarini, and T. Masson, Becchi-Rouet-Stora-Tyutin structure for the mixed Weyl-diffeomorphism residual symmetry, J. Math. Phys. **57**, 033504 (2016).
[150] J. François, Dilaton from tractor and matter field from twistor, J. High Energy Phys. 06 (2019) 018.
[151] E. De Paoli and S. Speziale, A gauge-invariant symplectic potential for tetrad general relativity, J. High Energy Phys. 07 (2018) 040.
[152] R. Oliveri and S. Speziale, Boundary effects in general relativity with tetrad variables, Gen. Relativ. Gravitation **52**, 83 (2020).
[153] R. Oliveri and S. Speziale, A note on dual gravitational charges, J. High Energy Phys. 12 (2020) 079.
[154] C. Fournel, J. François, S. Lazzarini, and T. Masson, Gauge invariant composite fields out of connections, with examples, Int. J. Geom. Methods Mod. Phys. **11**, 1450016 (2014).
[155] H. C. Schweinler and E. P. Wigner, Orthogonalisation methods, J. Math. Phys. **11**, 1693 (1970).
[156] J. François, Reduction of gauge symmetries: A new geometrical approach, Ph.D. thesis, Aix-Marseille Université, 2014, https://inspirehep.net/literature/1823987.
[157] T. Thiemann, Quantum gravity in the triangular gauge, Phys. Rev. D **110**, 124021 (2024).