POLITECNICO DI TORINO
Repository ISTITUZIONALE

Banded vaults with independent arches: analysis of case studies in Turin baroque atria

Original
Banded vaults with independent arches: analysis of case studies in Turin baroque atria / Natta, Fabrizio. - In: ACTA IMEKO. - ISSN 2221-870X. - 11:1(2022), pp. 1-7. [10.21014/acta_imeko.v11i1.1091]

Availability:
This version is available at: 11583/2977580 since: 2023-03-29T12:32:27Z

Publisher:
IMEKO

Published
DOI:10.21014/acta_imeko.v11i1.1091

Terms of use:

This article is made available under terms and conditions as specified in the corresponding bibliographic description in the repository

Publisher copyright

(Article begins on next page)

12 October 2024

ACTA IMEKO
ISSN: 2221-870X
March 2022, Volume 11, Number 1, 1 - 7

Banded vaults with independent arches: analysis of case studies in Turin baroque atria

Fabrizio Natta[1]

[1] *Department of Architecture and Design (DAD), Politecnico di Torino, V.le Mattioli 39, 10125 Torino, Italy*

ABSTRACT
This contribution presents a part of the work and the methodology applied to it developed for the realization of an international research project aimed at the analysis and preservation of an architectural heritage characteristic of Turin's baroque architecture: the 'a fasce' vaults, locally named as 'a fascioni'.
This architectural solution, used by important architects, such as Guarini up to the local workers, to cover spaces of various sizes, has found in the court of Turin area a wide application in buildings atria.
A considerable number of banded vaulted atria were identified and surveyed by the research group to recognize and investigate those whose bands are generated from independent arches.
The objective is the comparison of metric and geometric data between ideal models and realizations over time, to evaluate their variations and understand a constructive methodology through three-dimensional modeling.

Section: RESEARCH PAPER

Keywords: Banded vaults; architectural drawing; 3D modelling; point clouds

Citation: Fabrizio Natta, Banded vaults with independent arches: analysis of case studies in Turin baroque atria, Acta IMEKO, vol. 11, no. 1, article 8, March 2022, identifier: IMEKO-ACTA-11 (2022)-01-08

Section Editor: Fabio Santaniello, University of Trento, Italy

Received March 7, 2021; **In final form** March 7, 2022; **Published** March 2022

Copyright: This is an open-access article distributed under the terms of the Creative Commons Attribution 3.0 License, which permits unrestricted use, distribution, and reproduction in any medium, provided the original author and source are credited.

Corresponding author: Fabrizio Natta, e-mail: fabrizio.natta@polito.it

1. INTRODUCTION

This research project is a continuation of a study conducted by Roberta Spallone and Marco Vitali on complex brickwork vaulted systems in Turin's Baroque buildings [1]. The progress of the studies, and the enlargement of the research group, have led to the analysis of a considerable number of case studies in the Architectural Heritage of Turin.

The 'a fascioni' – or banded – vaults are architectural solutions for the covering of medium and large rooms derived from the Guarini experience. Guarini describes their characteristics in *Architettura Civile* (published posthumously in 1737) [2] and applies their forms in some of his projects. From Guarini's example, a remarkable production has emerged that has seen the work of many important architects, but also of others whose identity is unknown. They have applied formal and constructive principles that have become customary in the Turin building site, which have allowed a wide application in the civil buildings of the city.

Eleven vaulted Baroque atria were identified by the research group as banded vault, of which eight were accessible. One of the objectives was to catalogue and recognize those vaulted structures with independent arches and those in which the arches are generated by vertical cuts on the main reference vault (e.g., pavilion, 'a conca', 'a schifo', etc.).

This analytical phase preceded the comparison of the metric data obtained by TLS (Terrestrial Laser Scanning) metric survey, coordinated by Concepción López. The information obtained from the point cloud was fundamental for the comparison through sections of the various parts of the structure. The philological reconstruction of the design idea was analysed with ideal schematics of the treatises, archive drawings, and realizations in the city and through the tools of two- and three-dimensional modelling.

The studies that led to the continuation of this analysis [3], resume work methods already applied to other case studies [4], intending to define a systematic methodology after this extensive research.

2. ARCHITECTURAL TREATISES AND MANUALS

The 'a fascie' vaults are introduced, as we have seen, by Guarino Guarini into *Architettura Civile*. Starting from a rigorous

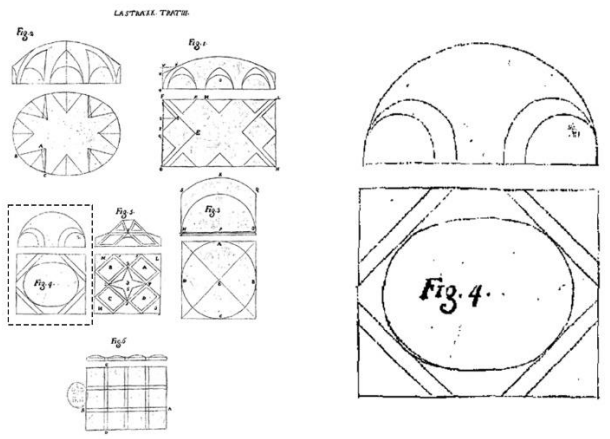

Figure 1. Banded vault in *Architettura civile*. Guarini 1737, Treat. III, Plate XX.

knowledge on the theme of vaulted systems, with studies related to geometry, stereotomy, calculation of surfaces and volumes present in his previous treatises (*Euclides adauctus* published in 1671 and *Modo di misurare le fabriche*, in 1674) in *Architettura Civile*, Treatise III, chapter XXVI 'Delle Volte, e varj modi di farle', Guarini dedicates the 'Osservazione Nona' and the 'Osservazione Decima' to banded vaults and flat banded vaults. This text is accompanied by two plates, 'Lastra XIX' and 'Lastra XX' (Figure 1), in which Guarini graphically illustrates the principles set out in the observations through a double orthogonal projection representation.

The architect describes textually the spatial genesis of this type of vault starting from a division of the space to be vaulted through wall-to-wall bands, with perpendicular or oblique direction, to create fields, which can then be filled with vaults of different types.

References to this type of construction can be seen in the work of authors contemporary to Guarini, as in the case of the vault of the Sala di Diana in the Reggia di Venaria by Amedeo di Castellamonte (1661 – 1662) [5], and in later periods between the end of the 17th century and the early 18th century by Guarini's collaborators (for example Gian Francesco Baroncelli in Palazzo Barolo, 1692) or by other internationally renowned architects such as Filippo Juvarra in Palazzo Martini in Cigala (1716).

Two centuries later, Giovanni Curioni conducted a study on this type of vaulting in bands, and with his *Geometria pratica* (1868) [6] he straddles the gap between a purely theoretical contribution and a practical approach. The author, starting from Guarini's approach, develops further considerations regarding the origin of the generating surface of the subdivisional bands of the space: "on the polygon to be covered with one of these times already insists the intrados of a time which, depending on the figure of the said polygon, can be a barrel, 'a conca', a pavilion, a barrel with heads of pavilion, 'a schifo', a dome" [7].

The subsequent operations are carried out by cutting with vertical planes on the reference surface and therefore do not seem to identify the construction for the independent arches. Also, in the Turin area we find the work of Giovanni Chevelley, where in his *Elementi di tecnica dell'architettura: materiali da costruzione e grandi strutture* (1924) [8] collects local building knowledge in the field of vaulted structures. The description of the banded vaults take up the definition of Curioni and in indicating some realizations emphasizes its spatial qualities and its variety of use in the atria of civil buildings and churches of the 17th and 18th centuries.

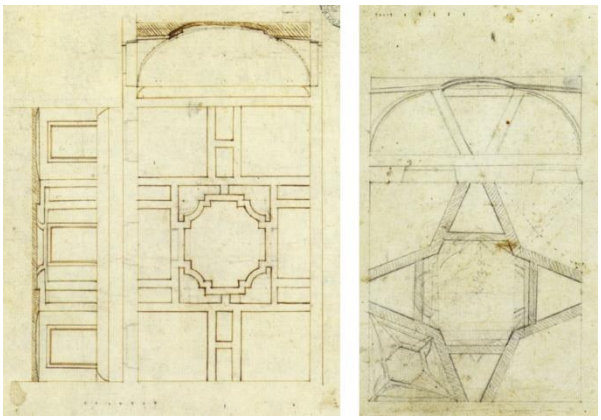

Figure 2. G.Guarini, Study of a banded vault, 1680 c., Torino, ASTo, Azienda Savoia-Carignano, cat. 43, mazzo I, fasc. 6, n. 36; G.Guarini, Study of a composed and banded vault, 1680 c., Torino, ASTo, Azienda Savoia-Carignano, cat. 95, mazzo II, fasc. 115, n. 23.

3. BANDED VAULT IN ARCHIVAL DRAWINGS

Alongside the source of the treatises, we can also find the documentary source, which consists of the original Guarini drawings, or the work of his collaborators. These documents, kept in the Archivio di Stato – Sezione Corte, have been studied directly by the author of this paper. They are firstly published and analysed in the archival regesto elaborated by Augusta Lange [9], for the 1968 conference on the figure of Guarini. Some of the drawings concern precisely the banded vaulted system applied to cover rooms in civil buildings (Figure 2) [10].

The examples describe different solutions starting from the same tracing of the bands, perpendicular to the wall in the first case and oblique in the other, with the possibility for both to identify the arches as independent [6], [11].

The one shown as an example (Figure 3), even in a hypothetical three-dimensional vision, reveals many similarities with the realizations surveyed in the fieldwork.

This structure is characterized by the double dimensions of the bands; starting from the transverse arches, the longitudinal band is specularly supported, leaving the central field free for the insertion of further shapes and decorations, as described in his treatise.

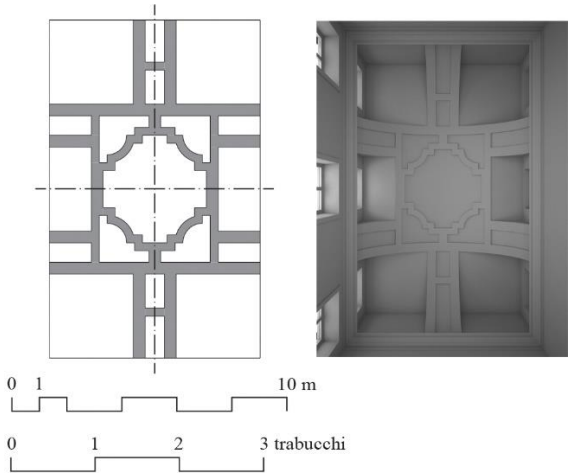

Figure 3. Plan distribution and digital reconstruction of a Guarini's banded vault.

Figure 4. Banded vault in baroque atria in Turin.

4. BANDED VAULTS IN TURIN BAROQUE ATRIA

The applications of this particular type of vaulted structure find therefore after Guarini a vast development in the city of Turin, taking the maximum expression and variety in the atria of the baroque palaces of the city. The already mentioned works by Castellamonte and Juvarra seem to follow a typological current that touches many other authors in the city of Turin. In their realizations, it is possible to identify those characters derived from Guarini's thoughts but also to understand the peculiarities of a different creative process.

The phase of identification and cataloguing of these vaulted structures was therefore fundamental. Is it possible to firstly identify census maps in the research directed by Cavallari Murat and published in *Forma urbana e architettura nella Torino Barocca* (1968) [12] and later in studies reported in the volume by Spallone and Vitali (2017).

This structure was built between the 17th and 18th centuries in the areas of the second and third baroque extension of the city.

In the variety of the baroque atria surveyed, three have been identified – at the moment of the research – as belonging to this category of vaulted structures with independent arches (Table 1).

The classification realized, focusing only on the vaulted structures analysed for this case study, wants to identify the maximum dimensions of the spaces and identifies the main axialities that compose the grid.

This cataloguing, certainly expandable by extending the analysis to entire buildings, has provided a first overview of the spatiality created through this structure. The most common grids, in the whole context, were 3x3, with a smaller number of 3x4 and 3x5 used for rooms with a larger floor plan.

The atria with vaulted structures generated from independent arches (Figure 4) by Filippo Juvarra (in Palazzo Martina in Cigala), Gian Giacomo Plantery (in Palazzo Capris in Cigliè), and Gian Francesco Baroncelli (in Palazzo Barolo) are characterized by a varied spatial division (Figure 5), maintaining the constant of the transversal arches as the basis for the creation of the subsequent bands and the vaults to complete the further fields created by the grids.

Table 1. Baroque atria under analysis.

Address	Width, Depth, Height (m)	Grid
Via della Consolata, 3	7,66 × 10,37 × 6,75	3 × 5
Via Santa Maria, 1	9,33 × 5,97 × 6,24	3 × 3
Via delle Orfane, 7	8,62 × 10,42 × 6,78	3 × 4

For the recognition of this type of structure, the point clouds generated by the TLS survey were therefore analysed. Through a phase of identification of the characteristic sections by using the point cloud, we tried to compare this information to evaluate their conformation and geometric construction. The comparison is made between the sections that followed the same direction (in these cases only longitudinal or transversal, as there are no examples with diagonal axiality). If the variances identified could be considered within a geometrically valid level (but not metrically defined and evaluated case by case), we proceed with the classification of this part of the vaulted structure of the atria [13].

The example of the vaulted atria of Via della Consolata is displayed to explain the classification method and the following identification of the construction geometries (Figure 6). In this case, the cross-sections lay the basis for the construction of the independent arches. After this step, the subsequent longitudinal arches are positioned using the transversal arches as a support base. This second level of arches, due to the conformation of the space, in its central field is straight to cover the whole space in

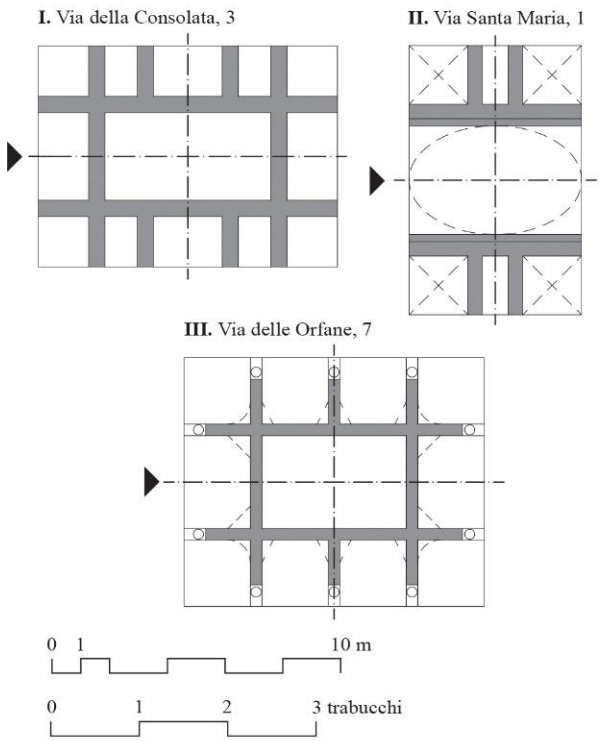

Figure 5. Plan distribution of banded vault in baroque atria in Turin.

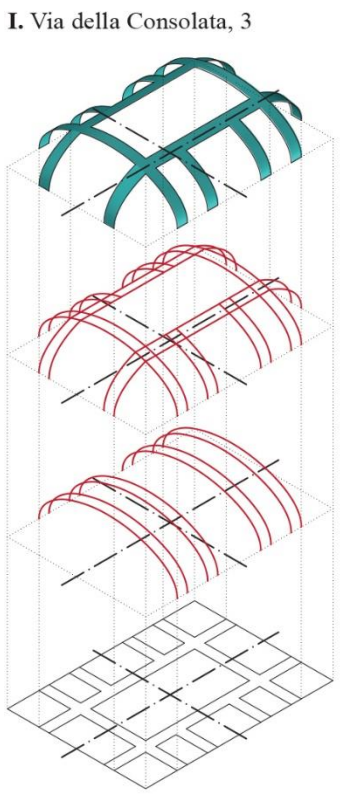

Figure 6. Graphic analysis and digital modeling of independent arches in the baroque atria in examination.

length. Solutions of this type of result to be very common in these vaults (the same system is used also in Via delle Orfane).

The opportunities related to this type of structure allow construction in the other fields of autonomous vaults, as suggested by Guarini's indications [14] and that we are going to see in the selected case study.

5. THE CASE STUDY: PALAZZO CAPRIS DI CIGLIÈ

The two-dimensional drawings allow making an initial analysis of the architectural consistencies which, reported in the three-dimensional model, are linked to the formal conception derived from architectural literature and archival documentation.

The case study now selected is Palazzo Capris di Cigliè (1730) by Gian Giacomo Plantery.

5.1. Survey Methodology and technical aspects

The research carried out has had as main purpose the geometric and metrological analysis of the vaults of the atrium of this noble palace with the use of terrestrial laser scanner (TLS).

Data obtained with this technology, led by Prof. Concepción López, generate easy-to-use models for later comparison with the geometric prototypes established in the literature [15], [16].

For this survey has been used the Focus-130x3D scanner by Faro. Its low weight (5,2 kg) and small size (24 x 20 x 10 cm) facilitate its transportation and handling. The integrated long-lasting battery (4 hours) ensures its use with no need to connect it to electricity during the entire/whole scanning session. It has a systematic error scope of ± 2 mm of distance in 25 meters which was acceptable for this study. It includes an integrated camera with 70 megapixel non-parallel colour overlay so the resulting point clouds a photographic realism very useful to understand it.

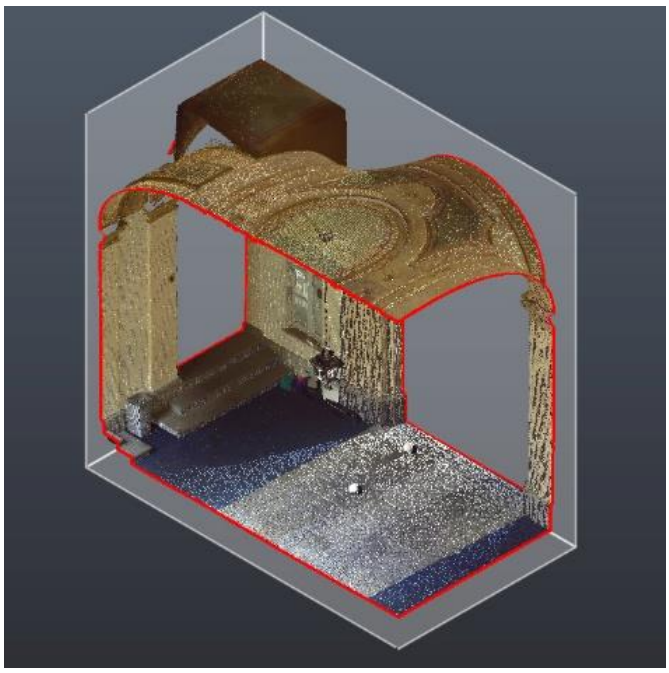

Figure 7. Point cloud of atria portion in Palazzo Capris di Cigliè.

The scans have been performed at a speed of 488.000 points/sec implied duration of each scan of approximately 8 minutes obtaining a good resolution of scanned. To process the scans, it was used Autodesk Recap Pro® and the cloud registration was done automatically, without errors, using the tools of the software. After this step, the point cloud was imported in Autodesk Autocad® to execute the success data (Figure 7 - Figure 8) [4].

5.2. Interpretation and modeling

Data obtained from the two-dimensional surveys with data from TLS survey are used by restoring the symmetries and searching the elementary geometries in sections [17].

The method of analysis, developed in previous research [4], is based on Guarini's general indications for the composition of this type of vaulted system: delineated the bands starting from the plan – identified in this case also three-dimensionally –, we pass to the filling of the empty spaces with a small vault.

The phases of geometric decomposition of the vaulted structure are shown through representation in isometric axonometry (Figure 9).

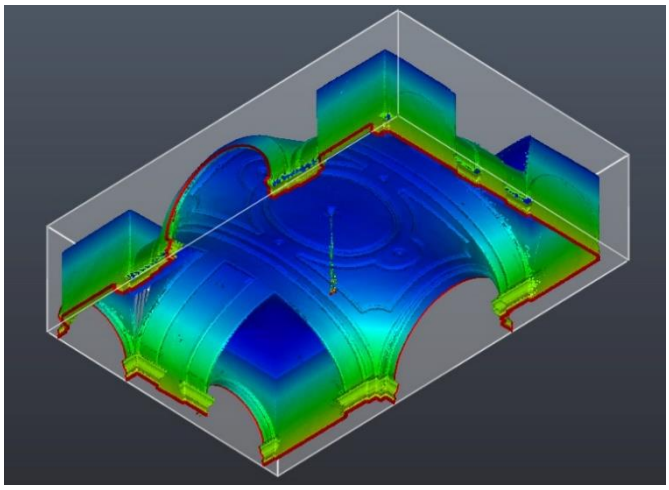

Figure 8. Point cloud of vault atria in Palazzo Capris di Cigliè.

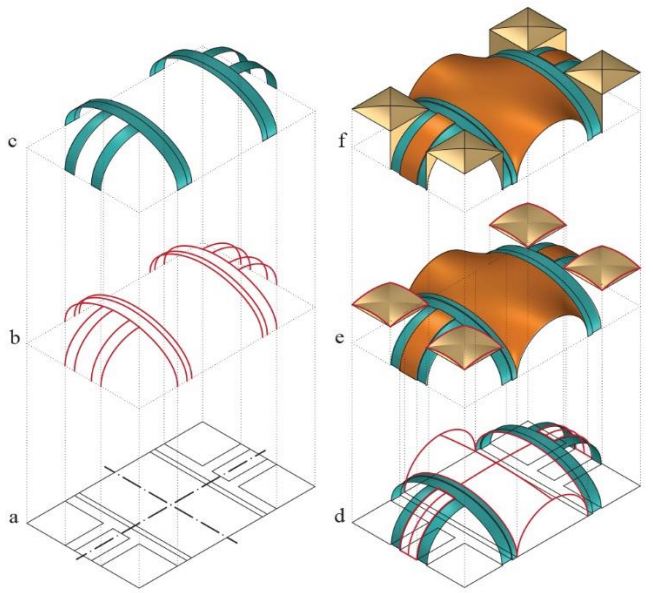

Figure 9. Graphic analysis and digital modeling of the vault in Palazzo Capris di Cigliè.

Through the point cloud sections are generated the most geometrically accurate curves (Figure 9b) (looking for a curve generation with the lowest possible number of centres). These curves, belonging to independent arches, allow generating the first order of the vaulted structure (Figure 9c).

In this case, the central area sees the interruption of the longitudinal arches leaving full range to a single vaulted structure. This vault superimposed on the arched system, is sailed-shaped, as evidenced also by the decoration. Along the major axis, the portion of the vault between the two arches follows the same geometry of these arches, recreating the idea of giant arches already seen in Guarini's drawings (Figure 9d).

The last fields to complete this vaulted structure are the angular ones. This time is independent to the main structure. Cross vaults are set starting from the intersection of the arches and they develop with very low height (Figure 9e).

One of the most relevant features of this case is certainly the width of the discontinued bands, with specifications similar to those of the Guarini design (Figure 2 and Figure 3) and leading to further evaluation of the creation of these bands and the internal areas created.

6. COMPARISON BETWEEN DESIGN GEOMETRIC MODEL AND SURVEY DATA

The phase that accompanies the redrawing and digital reconstruction of this vault model goes hand in hand with the research of comparison between the model built and generated through point cloud and the geometric model of this surface [18].

This results in finding and analysing the characteristic sections of the vaulted structure [19], in this case the component of bands generated by independent arches.

The replicable procedure [1] search in the section the geometric information useful for the construction of a theoretical model comparable to the original design idea; in this case study we extract fourteen sections from the point cloud (Figure 10).

The position of the sections in relation to the characteristics of the vaulted system led to their cataloguing, aimed at

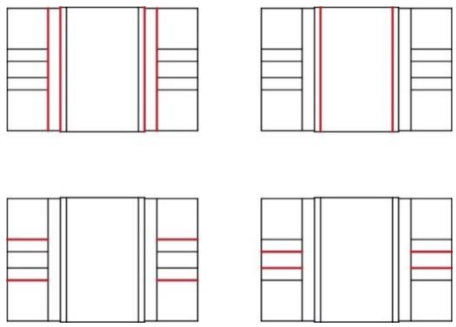

Figure 10. Scheme section of point cloud (red).

recognizing those which, by virtue of the hypothetical symmetry of the ideal model, should have the same shape.

Those of the main arch, aligned and superimposed with reference to the impost plane, have led to the recognition of axes, proportions, points of intersection and curves.

Among these, element by element, the polycentric curve (the latter with the smallest possible number of centers) was digitally constructed with Autodesk AutoCAD®, consistent with the techniques of construction of the centering (Figure 11).

At the end of this curve recognition phase, we moved on to the reconstruction of the theoretical three-dimensional model. These surfaces, modelled on Rhinoceros® 6, were exported in the .e57 format to be then overlaid with the point cloud inside the CloudCompare open source software (Figure 12). It is necessary to remember that the two digital products can never be perfectly overlapped: the point cloud brings with itself information about the consistencies in their current condition, the digital model, reconstructive of the design idea is generated through rigorously geometric references and restoration of the symmetries [3].

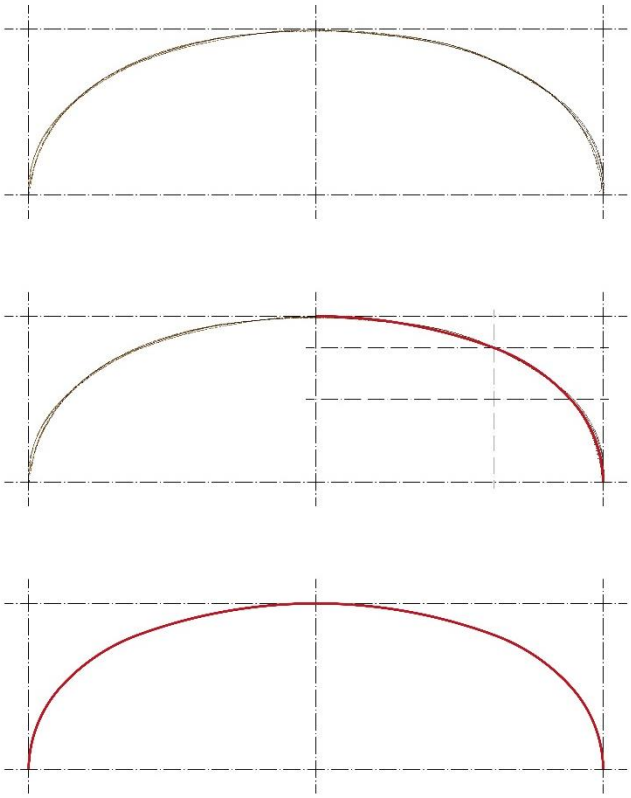

Figure 11. Tracing method for directrices and comparison with the section of point cloud (red).

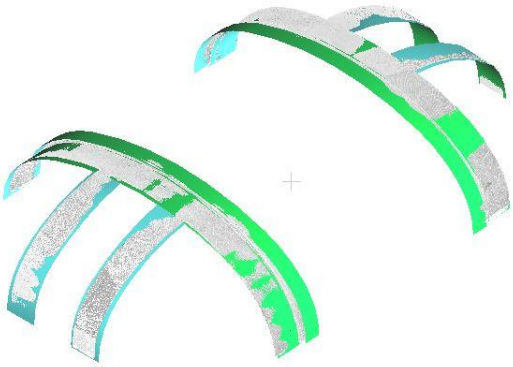

Figure 12. Tracing method for directrices and comparison with the section of point cloud (red).

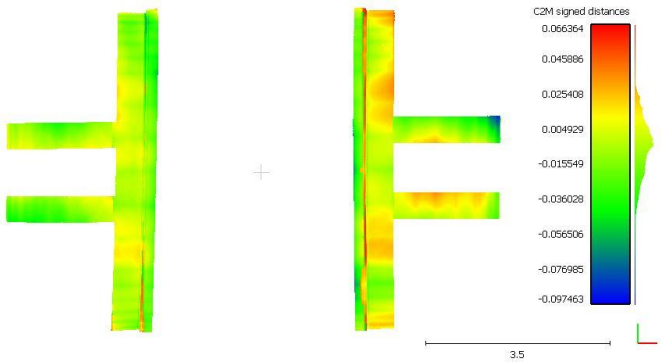

Figure 13. Tracing method for directrices and comparison with the section of point cloud (red).

The graphical outputs realized through the software, can show the standard distance between point cloud and ideal model (Figure 13). The higher distances between the two elaborations are identified in the more internal bands which, already in the extraction phase, were highlighted by a flexion near the keystone.

7. CONCLUSIONS

This paper outlines the methodological framework developed for the metric survey and the processing of knowledge data in the research on banded vaulted systems in Turin Baroque atria.

The integration between the technique of metric survey by laser scanning with digital drawing and modelling involves, as we have seen, the definition of a workflow aimed at optimizing the use of data.

Indeed, adhering to the objectives of the research, two-dimensional drawings must represent the atria in their current state, while three-dimensional modelling of the vaults is linked to the geometric reference models and aimed at the philological reconstruction of the design idea [18]. These procedures have given rise to new opportunities for research, such as the comparison (metric, but even more interesting, geometric) through the superimposition of ideal design models and point clouds. The deviation between the two digital products will not only reveal the deformations, structural failures, transformation that are part of the real-life of the building, but, above all, will provide new insights for the hypothesis on the necessary construction adaptions, and the centerings and laying techniques applied on building-site, that will contribute to the understanding of the relationship between design and construction.

ACKNOWLEDGEMENT

This contribution presents a development of the work and methodology elaborated within the international research project "Nuevas tecnologías para el análisisis y conservación del patrimonio arquitectónico" coordinated by Roberta Spallone, assisted by Marco Vitali (Department of Architecture and Design of the Politecnico di Torino). The project allowed the stay in Turin, as visiting professor, of Concepción López (Department of Graphic Expression in Architecture, Universitat Politecnica de Valencia). The group includes, in addition to the author of this work: Giulia Bertola and Francesca Ronco (Department of Architecture and Design, Politecnico di Torino). The research, favored by funding from the Ministerio de Ciencia, Innovación y Universidades of Spain, is aimed at the analysis and interpretation of an architectural heritage characteristic of Turin's Baroque production: the 'a fasce' vaults, locally named as 'a fascioni'.

REFERENCES

[1] R. Spallone, M. Vitali, Volte stellari e planteriane negli atri barocchi in Torino – Star-shaped and Planterian Vaults in Turin Baroque Atria, Aracne, Ariccia, 2017, ISBN 978–88–255–0472–9.

[2] G. Guarini, Architettura civile, Gianfranco Mairasse, Turin, 1737.

[3] F. Natta, Baroque banded vaults with independent arches: from literature to realizations in Turin atria, Proc. of IMEKO TC4 MetroArchaeo 2020 Virtual Conference "Metrology for Archaeology and Cultural Heritage", 22-24 October 2020, ISBN 978-92-990084-9-2, pp. 72-77. Online [Accessed 11 March 2022] https://www.imeko.org/publications/tc4-Archaeo-2020/IMEKO-TC4-MetroArchaeo2020-014.pdf

[4] M. C. López González, R. Spallone, M. Vitali, F. Natta, Baroque Banded Vaults: Surveying and Modeling. The Case Study of a Noble Palace in Turin, in: The International Archives Of The Photogrammetry, Remote Sensing And Spatial Information Sciences, Copernicus GmbH (editors). Volume XLIII-B2-2020 (2020), pp. 871-878. DOI: 10.5194/isprs-archives-XLIII-B2-2020-871-2020

[5] E. Piccoli, Le strutture voltate nell'architettura civile a Torino (1660-1720), in: Sperimentare l'architettura: Guarini, Juvarra, Borra e Vittone. G. Dardanello (editor). Fondazione CRT, Turin, 2001, ISSN 0008-7181, pp. 38-96.

[6] G. Curioni, Geometria pratica applicata all'arte del costruttore, Negro, Turin, 1868.

[7] R. Spallone, Delle volte, e vari modi di fare. Modelli digitali interpretativi delle lastre XIX e XX nell'Architettura Civile di Guarini, fra progetti e realizzazioni realizzazioni / On the vaults and various modes of making them. Interpretative digital models of the XIX and XX plates in Guarini's Architettura Civile, between designs and buildings, in: Le Ragioni del Disegno. Pensiero Forma e Modello nella Gestione della Complessità / The Reasons of Drawing. Thought Shape and Model in the Complexity Management, S. Bertocci, M. Bini (editors). Proc. of 38th Convegno Internazionale dei Docenti delle Discipline della Rappresentazione, Florence, Italy, 15 – 17 September 2016, pp. 1275-1282.

[8] G. Chevalley, Elementi di tecnica dell'architettura: materiali da costruzioni e grosse strutture, Pasta, Turin, 1924.

[9] A. Lange, Disegni e documenti di Guarino Guarini, in: Guarino Guarini e l'internazionalità del Barocco. V. Viale (editor). Proc. of the International Conference promoted by the Accademia delle Scienze di Torino, Turin, Italy, 30 September – 5 October 1968, Vol I, pp. 91-236.

[10] F. Natta, Dai disegni autografi di Guarini all'interpretazione digitale: modelli di volte a fasce, in: Sistemi voltati complessi: geometria, disegno, costruzione Complex Vaulted Systems: Geometry, Design, Construction. R. Spallone, M. Vitali, A. Giordano, J. Calvo-López, C. Bianchini, A. López-Mozo, P.

Navarro-Camallonga (editors). Aracne, Ariccia, 2020, ISBN 978-88-255-3053-7, pp. 213-228.
[11] G. Curioni, Lavori generali di architettura civile, stradale ed idraulica e analisi dei loro prezzi. Negro, Torino, 1866.
[12] A. Cavallari Murat, Forma urbana ed architettura nella Torino barocca: dalle premesse classiche alle conclusioni neoclassiche, UTET, Turin, 1968, 2 Voll. 3 Tome.
[13] M. Vitali, Astrazione Geometrica e modellazione tridimensionale per la definizione di una grammatica spaziale delle volte a fascioni/Geometric Abstraction and three-dimensional modeling for the definition of a spatial grammar of the 'a fascioni' vaults, in R. Salerno (Ed.), "Rappresentazione/ Materiale/ Immateriale – Drawing as (In)Tangible Representation", Gangemi, Roma, 2018.
[14] G. Guarini, Modo di misurare le fabriche. Per gl'Heredi Gianelli, Torino, 1674.
[15] A. Almagro Gorbea, Half a century documenting the architectural heritage with photogrammetry, EGE Revista de expresión gráfica en la edificación, 11, 2019, pp. 4-30.
DOI: 10.4995/ege.2019.12863
[16] Michael E. Auer, Ram Kalyan B. (eds), Cyber physical Systems and Digital Twins. Proceedings of the 16th International Conference on Remote Engineering and Virtual Instrumentation. Springer, Berlin, 2019.
DOI: 10.1007/978-3-030-23162-0
[17] F. Stanco, S. Battiato, G. Gallo, Digital Imaging for Cultural Heritage Preservation: Analysis, Restoration, and Reconstruction of Ancient Artworks. CRC Press, 2017.
DOI: 10.1201/b11049
[18] A. Samper., G. González, B. Herrera, Determination of the geometric shape which best fits an architectural arch within each of the conical curve types and hyperbolic-cosine curve types: The case of Palau Güell by Antoni Gaudí, Journal of Cultural Heritage, Volume 25, 2017, pp. 56-64.
DOI: 10.1016/j.culher.2016.11.015
[19] E. Lanzara, A. Samper, B. Herrera, Point cloud segmentation and filtering to verify the geometric genesis of simple and composed vaults. Int. Arch. Photogramm. Remote Sens. Spatial Inf. Sci., XLII-2/W15, 2019, pp. 645-652.
DOI: 10.5194/isprs-archives-XLII-2-W15-645-2019