POLITECNICO DI TORINO
Repository ISTITUZIONALE

Design and operation of an industrial size adsorption-based cleaning system for biogas use in fuel cells

Original
Design and operation of an industrial size adsorption-based cleaning system for biogas use in fuel cells / Gandiglio, Marta. - In: ENERGY. - ISSN 0360-5442. - 259:(2022), p. 124941. [10.1016/j.energy.2022.124941]

Availability:
This version is available at: 11583/2970625 since: 2022-10-19T07:58:30Z

Publisher:
Elsevier

Published
DOI:10.1016/j.energy.2022.124941

Terms of use:

This article is made available under terms and conditions as specified in the corresponding bibliographic description in the repository

Publisher copyright
Elsevier postprint/Author's Accepted Manuscript

© 2022. This manuscript version is made available under the CC-BY-NC-ND 4.0 license http://creativecommons.org/licenses/by-nc-nd/4.0/.The final authenticated version is available online at: http://dx.doi.org/10.1016/j.energy.2022.124941

(Article begins on next page)

12 October 2024

Design and operation of an industrial size adsorption-based cleaning system for biogas use in fuel cells

Marta Gandiglio

Department of Energy, Politecnico di Torino
C.so Duca degli Abruzzi 24, 10129 Torino (IT)
marta.gandiglio@polito.it

ABSTRACT

The use of biogas, one of the main players in the energy transition, requires the efficient removal of harmful traces of impurities. Reliable and robust purification systems are therefore required before the biogas is fed into cogeneration or upgrading plants.
In this work, an industrial-scale biogas purification system for the deep removal of impurities is analysed. The experimental design phase in the laboratory and the subsequent evaluation of the system's performance in the field, are presented. The work was carried out as part of the DEMOSOFC project, where the first industrial-scale SOFC system was operated in a real wastewater treatment plant fed with sewage gas.
The system is an adsorption-based plant that uses multiple sorbents. The on-site operation lasted more than 15,000 hours and was used to analyse the performance with real sewage biogas. A continuous and innovative online gas analyser was also installed, and its measurements were verified with analyses from an external laboratory.
The performance of the sorbents met the expectations measured in the laboratory. The loading rate – measured in % of the maximum loading rate of the sorbents – was 35% for H_2S and 1.8% for siloxanes, confirming the optimal design of the purification unit.

Keywords: biogas, fuel cell, cleaning, purification, contaminants removal

1. Introduction

Biofuels are an emerging alternative to conventional fossil fuels, especially when derived from wastes and residues of industrial processes. According to the EBA's 2020 statistical report [1], there are currently 18,946 biogas plants in Europe and the total number has been increasing since 2019 (after a steady value between 2014 and 2019). The main markets for biogas are Germany, Italy, France and the UK, and production in the sector is expected to double by 2030 and quadruple by 2050, as the potential is not yet exhausted.

Biogas is typically used in internal combustion engines (ICEs) or microturbines, in combined heat and power (CHP) mode to generate electricity and heat locally. A clean and highly efficient alternative is fuel cells, especially high-temperature solid oxide fuel cells (SOFCs), which have higher electrical efficiency (50-60%) and no pollutant emissions (NOx, SOx, PM, VOC) to the atmosphere.

If fuel cells are chosen as CHP generators in a biogas plant, the system for cleaning the biogas impurities should be adapted accordingly. Fuel cells are indeed more sensitive to various types of impurities typically found in biogases, including sulphur, silicon and chlorine compounds, as demonstrated in various literature papers [2]. For this reason, biogas impurities should be removed at very low levels (typically < 1 ppm) to ensure a safe environment at the fuel cell anode [3]. Saadabadi *et al.* [4] confirmed that raw biogas often contains significant amounts of undesirable trace compounds such as hydrogen sulphide and siloxanes. These molecules can lead to SOFC degradation even at very low concentrations. Another critical point is the variable amount of these impurities depending on the operation of the anaerobic digester and the composition of the feedstock [5,6].

Saadabadi *et al.* [4] described a biogas SOFC proof of concept in a real wastewater treatment plant in Mataró (Spain). This is one of the few SOFC experiences in the world using biogas in a real plant, and the purification unit is presented in the scientific papers of De Arespacochaga *et al.* [7,8]. The system (2.8 kW SOFC) operated for about 700 hours. The purification system consisted of a first stage to reduce the hydrogen sulphide content to less than 1000 ppmv, followed by deep purification of the biogas to reduce its concentration to less than 0.5 ppmv. The biggest challenge was the economics of the gas cleaning system (the cost of gas cleaning is about 20% of the cost of electricity). The work deals with a proof-of-concept scale plant anyway, which is underlined by the very high cost compared to the energy generated.

More recent work deals with the combination of agricultural biogas and SOFC, such as that of Baldinelli *et al.* [9]. In this work, the authors presented a market analysis for small biogas plants in combination with SOFC and a feasibility study on a specific case study [10]. The latter includes a generic desulphurisation system based on iron sponge adsorption; technical and economic details on the cleaning system are not given. Kamalimeera *et al.* [11] also analysed the biogas SOFC scenario from the Indian perspective and confirmed - from a modelling perspective - the large impact of the cleaning system on the overall economics of the plant.

A detailed techno-economic study of biogas cleaning technologies for off-grid SOFC applications was presented by Wasajja *et al.* [12]. The authors confirmed the list of harmful contaminants to be removed and the required purification level for biogas SOFC applications (generally < 2 ppm for H_2S). The main challenges identified by the authors for gas cleaning plants are the high capital and maintenance costs. This work did not focus on the technical description of the cleaning system, but rather on the cleaning stages for a SOFC. Thiruselvi *et*

al. [13], in their critical overview of global trends in the biogas scenario, also mention the use of biogas in fuel cells, but only consider biogas "after a upgrading process". In this process, all impurities are removed and the output stream is an almost pure biomethane stream.

Various biogas purification systems for conventional CHP plants are available on the market, both for contaminants-only removal and for upgrading biogas to biomethane. Existing technologies for purifying biogas for use in ICEs include the removal of sulphur (usually only H_2S) by chemical or biological scrubbers (for high contaminants content) or adsorption-based systems (for low contaminants content). These systems are capable of delivering biogas according to the specification of ICEs (typically 100-150 ppm for H_2S [14]). On the other hand, biogas upgrading by means of pressure swing adsorption [15], water/chemical scrubbing and membranes, completely removes the impurities to meet the requirements of the natural gas grid. However, these processes also remove CO_2, resulting in high electricity consumption. A commercial system that can meet the strict SOFC limits for all impurities is not yet available on the market.

Even though the purification unit is recognised in many literature works as a critical aspect in biogas SOFC plants, there are few analyses that specifically address the deep purification of biogas for use in fuel cells. This paper focuses on the design process and operational results of a large-scale cleaning system for biogas use in fuel cells. The system was built and operated as part of the DEMOSOFC project [16,17]. It is the first industrial-scale (100 kW installed) biogas-fuelled SOFC plant in Europe. The cleaning system was developed by the research group STEPS of the Politecnico di Torino and built by the Italian company Biokomp [18]. The system, together with the SOFC modules.

The novelty of the presented work is based on the innovative aim of the cleaning system, which was developed for a deeper removal of impurities compared to conventional applications and verified in a real industrial environment. The lessons learned during long-term operation are unique in the scientific world of biogas-SOFC and the results lead to a clearer picture, both technically and economically. The lessons learned from this unique experience will be essential for future replications of the biogas-SOFC concept. The last section indeed refers to the replication analysis, which is based on a detailed technical study to further optimise the presented concept.

The work starts with a section on the case study (Chapter 2), methodology (Chapter 3), which covers the design process from the experimental activity to the final vessel layout. The results section (Chapter 4) includes the performance analysis for the field operation and the validation of the online analyser, followed by a discussion on the lessons learned.

2. Case study description

The biogas purification system was installed and operated at the SMAT Collegno wastewater treatment plant (Italy) (Figure 1). The plant is a medium-sized wastewater treatment plant (the 50th in Italy for the input load) that produces biogas from sewage sludge, a by-product of wastewater treatment [16]. Biogas production takes place in a dedicated anaerobic digester operating at about 40 °C (mesophilic conditions) and average production is 50-60 m^3/h. There are some seasonal fluctuations, especially in summer, due to the fluctuating input wastewater.

Together with the purification plant, 2 SOFC modules (2 x 50 kW) were also installed as part

of the DEMOSOFC project to generate electrical and thermal energy for the plant.

Figure 1. DEMOSOFC plant aerial view. The cleaning container is the grey and green 40 feet container one on the right.

A 1-year detailed biogas analysis was performed at the beginning of the project, to understand the level and type of contaminants in the wastewater biogas. The results of the analytical campaign are summarised in Figure 2 and Table 1. The analysis showed a high methane content (63.9% on average). Hydrogen sulphide was detected as the most abundant and dangerous type of sulphur in the biogas, with an average value of 26 mg/m^3 (about 18-19 ppm), and the value remained almost stable during the year. Total silicon was in fact more unstable, with an average value of 5.4 mg/m^3 and peak values of up to 16.5 mg/m^3. The most abundant siloxane was D5, and oxygen was also detected, albeit with fluctuating values.

The relatively high quality of the biogas (low pollutant content compared to average literature values for biogas) confirmed the decision to use an adsorption-based purification system without the need for upstream biochemical scrubbing to remove sulphur.

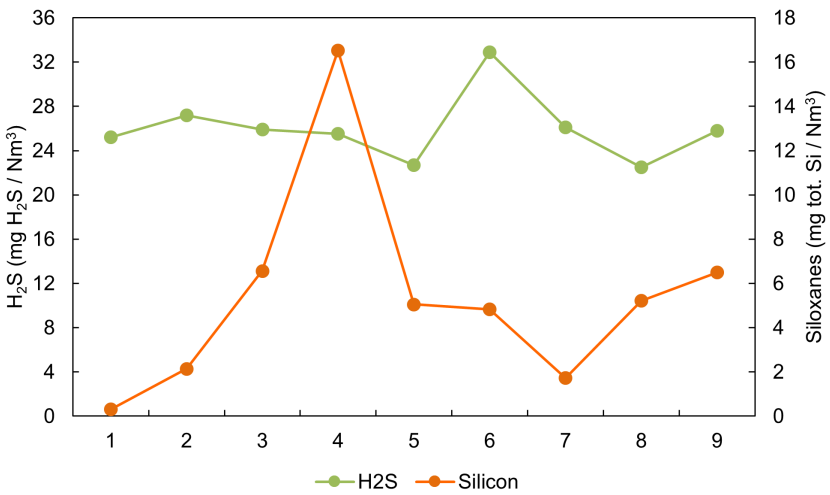

Figure 2. H_2S and siloxanes (expressed as total Si) contents in 2015-2016.

Compound		Jul 2015	Jul 2015	Aug 2015	Sep 2015	Sep 2015	Oct 2015	Jan 2015	Feb 2016	Mar 2016
Methane	**%**	**65.5**	**64.7**	**63.4**	**63.8**	**63.1**	**64.4**	**65.9**	**61.61**	**62.78**
Carbon dioxide	%	32.2	30.39	30.15	31.6	33.3	35.1	33.2	37.98	36.14
Oxygen	%	0.33	0.22	0.17	0.11	0.06	0.02	0.02	0.01	0.04
Carbon monoxide	mg/m^3	2.7	3.1	2.1	1.8	1.2	0.8	0.5	0.3	0.2
Hydrogen sulfide	**mg/m^3**	**25.2**	**27.2**	**25.9**	**25.5**	**22.7**	**32.9**	**26.1**	**22.5**	**25.8**
Sulphur - Mercaptans	**mg/m^3**	**2.7**	**2.9**	**2.4**	**2.3**	**2.1**	**2.6**	**1.5**	**1.3**	**1.4**
Ammonia	mg/m^3	0.132	0.112	0.039	0.091	0.052	0.032	0.03	0.01	0.01
Total siloxanes	mg/m^3	0.82	5.67	17.4	43.8	13.4	12.8	4.55	13.81	17.2
D6	mg/m^3	0.00	0.17	0.61	1.92	0.95	0.89	0.25	1.26	0.5
D5	mg/m^3	0.75	4.08	13.57	33.15	9.80	9.34	3.47	10.41	14.4
D4	mg/m^3	0.07	1.42	2.87	8.10	2.21	2.25	0.75	2.14	2.3
L3	mg/m^3	0.00	0.00	0.35	0.63	0.44	0.32	0.08	0.00	0.00
Si tot (calculated)	**$mgSi/m^3$**	**0.31**	**2.14**	**6.56**	**16.52**	**5.05**	**4.83**	**1.72**	**5.21**	**6.49**
Hexane	mg/m^3	0.23	0.31	0.29	0.61	0.31	0.36	0.17	0.32	0.26
Heptane	mg/m^3	0.2	0.26	0.19	0.58	0.12	0.35	0.2	0.16	0.18
Toluene	mg/m^3	6.12	5.67	9.41	3.21	8.75	8.76	2.63	2.98	1.86
Xylene	mg/m^3	0.48	0.77	0.4	0.55	0.17	0.21	0.15	0.14	0.11
Limonene	mg/m^3	5.11	4.08	3.81	7.95	8.15	6.76	14.07	13.72	10.37
Aliphatic Hydrocarbons	mg/m^3	118.5	114.2	112.7	116	76.7	46.00	48.3	21.4	33.67
Aromatic Hydrocarbons	mg/m^3	3.22	24.5	6.81	6.57	3.98	1.85	2.94	2.24	5.55
Alicyclic Hydrocarbons	mg/m^3	21.4	0.5	22.7	16.3	11.7	9.13	3.17	2.03	8.7

Table 1. Detailed biogas analysis at the SMAT WWTP during 2015-2016.

3. Methodology

The design phase of the purification plant consisted of several activities, which are illustrated in Figure 3 and listed below.

1. Prior to the design phase, a historical biogas analysis was conducted to identify the most common impurities to be removed.
2. The requirements for the cleaning unit outlet were specified by the SOFC module supplier (system tolerance to impurities): 10 ppb for silicon compounds and 30 ppb for sulphur compounds.
3. The experimental campaign carried out at the Politecnico di Torino aimed to select the best sorbents for the composition of the biogas of the treatment plant.
4. The entire layout of the purification system was finally developed in collaboration with Biokomp Srl, the company responsible for the design and construction of the purification and compression stage.

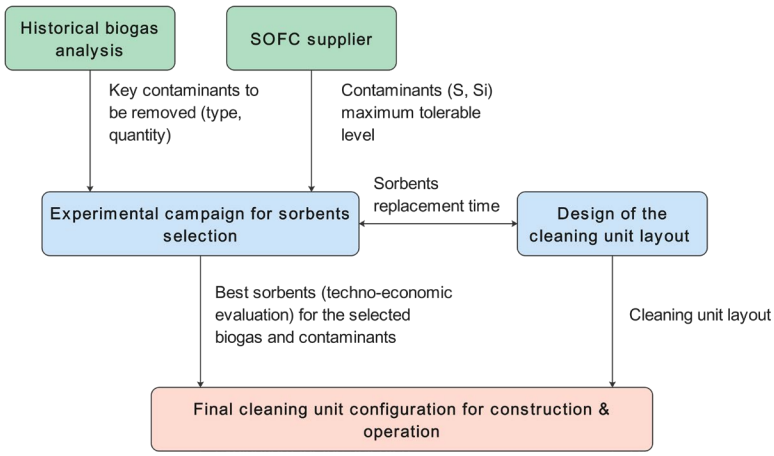

Figure 3. Methodology for the cleaning unit design.

3.2 Materials and methods

The sorbents for the biogas purification plant were selected after testing a selection of commercial materials under various operating conditions. The description of the whole experimental activity can be found in the authors' previous publications [19–21]. This chapter summarises the sorbents tested, the methodology and the main results useful for the design of the cleaning system.

Based on an initial market research and after a first screening test, the following groups of materials (Table 2) were selected:

- Sulfatrap sorbents. Sulfatrap [22] is a US company well known in the world of FC and has extensive knowledge in the field of deep cleaning of biogas, including non-traditional impurities and high cleaning requirements (e.g. for fuel cells). Sulfatrap sorbents can operate under almost all operating conditions (biogas quality and composition, O_2 content and moisture) with high adsorption performance and are made of metal oxides. The main disadvantage is the cost, which is greatly increased by taxes and duties.
- Impregnated activated carbons. The second group of materials was supplied by AirDep [23], a company (IT) involved in cleaning systems for ICEs. These sorbents (impregnated activated carbons) are also available on the market from other companies. The big advantage of this solution is the low cost.

Depending on the manufacturer, the sorbents are available in standard pellet form (cylindrical) or in irregular form (gravel-shaped). The activated carbons were packed into a mini-reactor and exposed to the flow of the selected gas mixture. In parallel with the reactor, a bypass line was added through which the gas was diverted to purge the system and clean the analyser without interacting with the activated carbons.

Two different H_2S analysers were used depending on the type of tests performed:

- the MECCOS® eTr Transmitter (electrochemical H_2S sensor from Leopold Siegrist GmbH, Karlsruhe, Germany [24]), which was used in the tests where only H_2S had to be detected;
- the Qualvista biogas monitor (Qualvista Ltd, Helsinki, Finland [25]), which was used in the co-adsorption tests in the presence of H_2S and siloxanes.

The whole experimental campaign on siloxanes was carried out at the Fondazione Edmund Mach (Trento, IT) and is described in [20,26,27]. Siloxanes were found to be the easiest molecule to remove with a very high adsorption capacity. H_2S, on the other hand, was more critical and represented the limiting factor in the development phase.

Product name	Producer	Suggested for	Impregnation	Pellet size (diameter, mm)	Approx. cost (€/kg)
R8G	Sulfatrap	Siloxanes, large size sulfur compounds, and low H_2S levels	Coper hydroxide and copper oxide	1.7-3.4 (variable)	> 15 €/kg
CKC	AirDep	H_2S, mercaptans, organic sulphide, acid compounds	Potassium hydrogen carbonated	4	2.8 €/kg
CKI	AirDep	Sulphur compounds	Potassium iodide	4	5 €/kg
C64	AirDep	VOC and siloxanes	n.a.	4	2.2 €/kg

Table 2. Selected sorbents for the experimental campaign.

The design parameters for the purification system (Figure 4) were:

- Nominal biogas flow rate: 52 m^3/h
- L/D: 1.7 (based on the design of the biocomp reactors)
- Aspect ratio: > 10
- Velocity: ~ 0.038 m/s
- H_2S concentration: 20 ppm (average value from historical biogas analysis)
- Siloxane concentration: 1 ppm (average value from historical biogas analysis)

The laboratory tests attempted to operate under similar operating conditions to the final cleaning plant. The aspect ratio, defined as the ratio between the internal diameter of the reactor and the average diameter of the coal pellets used to avoid the "channelling effect", was always chosen to be greater than 10.

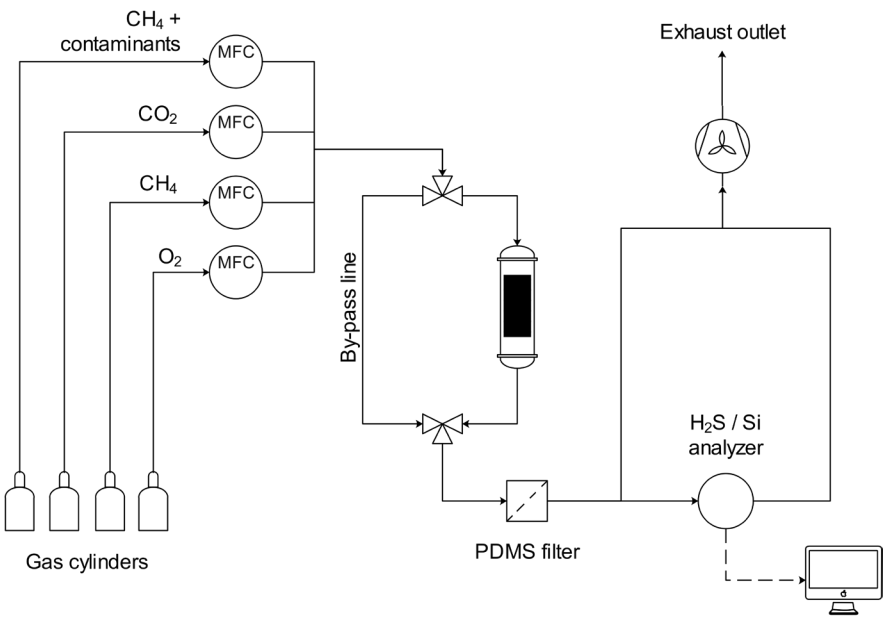

Figure 4. Experimental setup for the adsorption tests.

The adsorption capacity Ads_S (mg_S/g_{AC}) has been determined by Eq. 1, expressed in terms of sulfur:

$$Ads_S = \frac{\dot{m}_{biogas} \cdot c_S \cdot \tau_{BT}}{m_{AC}} \quad (1)$$

The parameters involved are the biogas flow rate $\dot{m}_{biogas}$ (m^3/s), the concentration of sulfur in the biogas c_S (mg/m^3), the breakthrough time τ_{BT} (s) and the amount of activated carbon in the reactor m_{AC} (g).

As for the breakthrough time, it was considered as the period during which the H_2S output concentration remains constant at zero. The purification system was designed to replace the sorbents after the breakthrough time. All experimental activity dealt with the influence of H_2S content (adsorption isotherm), L/D ratio, gas velocity and oxygen content [19].

Three sorbents selective for H_2S removal were analysed:

- Sulfatrap R8G was selected for its superior performance compared to the others (using a CH_4/CO_2 mixture under dry conditions without oxygen addition).
- AirDep CKC and AirDep CKI were considered on the recommendation of commercial sorbent suppliers for sulphur removal.

Figure 5-a shows the performance of the three sorbents with a dry mixture (CH_4/CO_2 composition equal to 62.5%/37.5%) and with O_2 addition (0.1%). The commercial sorbents CKC and CKI showed poor performance in the tests without oxygen (3.8 and 4.7 mg_S/g_{AC}, respectively), while Sulfatrap R8G showed decent performance (38 mg_S/g_{AC}). In the tests with added oxygen, the activated carbons had a very large increase compared to R8G: CKC and CKI performance increased by more than 2100% (85 mg_S/g_{AC}) and 480% (27. mg_S/g_{AC}), respectively. In contrast, the R8G sorbent showed a minor increase of only 30% due to the presence of oxygen (50 mg_S/g_{AC}). The presence of oxygen in the biogas stream always

improves the performance of impregnated activated carbons. This consideration is also well supported in the literature, where other types of activated carbons were tested and showed positive changes in adsorption capacities from about 100% to 700% [28–30]. The reason for the large increase in sorbent performance is related to the chemisorption effect. The hydrogen sulphide reacts chemically with the oxygen and increases the adsorption rate of the sorbent compared to physisorption at the pores of the sorbent, which is the only phenomenon that occurs in the absence of oxygen.

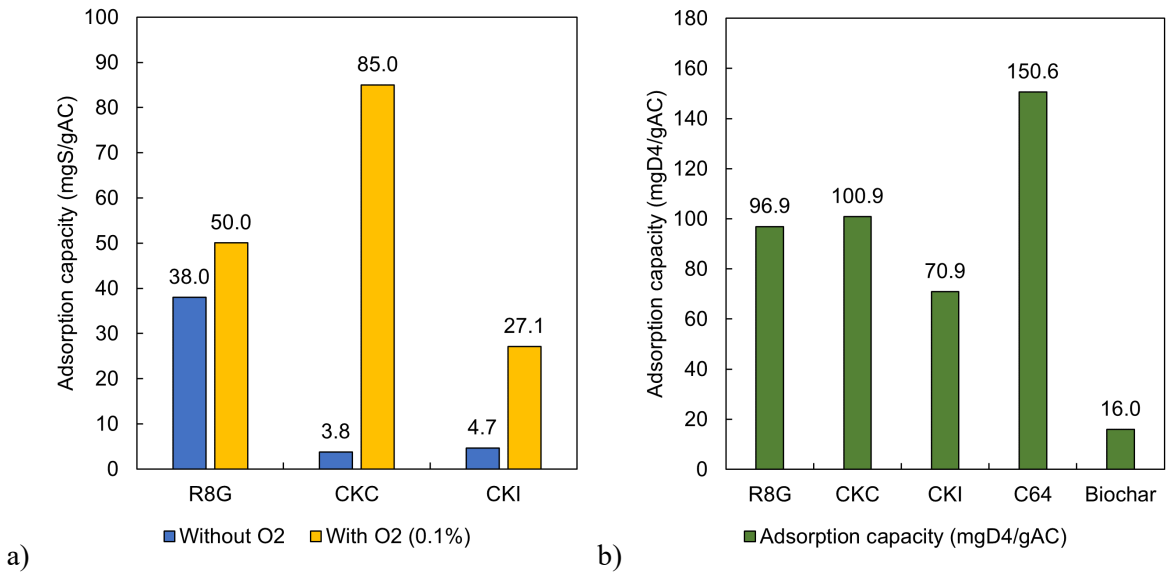

Figure 5. Sorbents' performance concerning a) H_2S adsorption without and with oxygen in the biogas mixture (Test conditions: CH_4/CO_2 62.5%/37.5%, O_2 0-0.1%, inlet H_2S concentration 95 ppm, L/D 5-10, gas velocity 0.27 m/s) and b) Sorbents performance for siloxane removal. (Test conditions: CH_4/CO_2 62.5%/37.5%, inlet D4 concentration 20 ppm, L/D 3-6, gas velocity 0.27 m/s).

A similar experimental campaign was also carried out for the removal of siloxanes, using D4 as a representative of the siloxane family in biogas. Sulfatrap R8G, AirDep CKI, CKC and C64 (the latter suggested for silicon removal) and biochar were tested under the same test conditions as for the sulphur tests. The results indicated the superior performance of C64 (Figure 5-b). In addition, it can be noted that all sorbents performed better with siloxanes due to the larger dimensions of the silicon molecules that support the physisorption effect.

Further tests were also conducted to investigate the effect of co-adsorption in the presence of H_2S and D4 to understand the possible negative effect of silicon on sulphur removal. The presence of D4 reduced the performance of the sorbent in H_2S removal by about 50% for both CKC and R8G. For this reason, the purification system was designed to first remove siloxanes (which are easily removed even in the presence of sulphur) and then H_2S (without co-adsorption effect by silicon).

Based on the above results and taking into account the adsorption isotherm (which gives information on how the test results decrease when the input concentration is lower) and the cost of the sorbents (Table 2), the sorbents were selected. For H_2S and D4, commercially available CKC and C64 sorbents, respectively, were chosen. Activated carbon was chosen because the oxygen molecule was always present in the sewage gas in the historical analysis (Table 1) and its presence in biogases was also confirmed by literature studies. In addition,

the amount of oxygen required was very low (according to the stoichiometry of the chemisorption reaction, O_2 should be ½ of H_2S on a mole/volume basis).

3.3 Cleaning unit design

The purifier was built by Biokomp Srl and its construction is shown in Figure 6. Before the biogas reaches the purification system (marked in yellow), it is directed to a gravel philtre, a fan and a first cooler, which are located near the digester. After a 100-metre pipeline, the biogas then enters the purification tank. The purification system consists of six vessels and each vessel is filled with 250-300 kg of sorbent (the internal vessel geometry was developed to optimise the use of the sorbent and is the property of Biokomp Srl). The amount of sorbent has been set by Biokomp so that the lifetime of the sorbent is 1 year, based on the results of the experimental activity.

The first set of four vessels is filled (in terms of type and order of sorbents) using the optimal arrangement found in the experimental phase (Si and S sorption removal) and then repeated twice. The vessels are installed in the so-called lead-and-lag configuration, which allows the system to work with the two pairs of vessels in both series and parallel mode. In nominal operation, the system operates in series configuration (four vessels in series) to ensure a safe biogas outlet to the fuel cell (with one lead pair, the first, and one lag). If a breakthrough is detected, the four tanks can be switched to a parallel arrangement (a row of two tanks): the two "used" sorbents can be replaced while the system continues to operate with the other two. After maintenance, the system is switched back to the series configuration, but with changed line/delay pairs. In this way, the fresh sorbents are always placed downstream in the series. The same lead-and-lag layout was used for the second pair of bins, which were used only as siloxane ultra-polishers in case of problems in the first set of reactors.

The system includes several available sampling points (marked with a yellow/orange "S" in Figure 6), three of which are connected to the continuous gas analyser. The online gas analyser monitors:

- Raw biogas entering the tank (sampling S1).
- Biogas after the first two lead reactors (sampling S2), to detect breakthrough and plan the replacement of the sorbents.
- Biogas after the complete set of four lead-and-lag vessels (sampling S3) to validate the biogas routed to the fuel cell system (even if the polishing bed is still available after this point).

The online biogas analyser was supplied by Qualvista Ltd. [25]. The analyser can detect CH_4, CO_2, O_2, H_2S and total silicon with separate sensors (Table 3). The main innovation of this system is the online silicon detector, which is a patented modified NDIR sensor. Each measurement takes 40 minutes, 20 minutes for the "zero value" and 20 minutes for the actual biogas analysis. The raw biogas (sampling S1) is measured only once a day to avoid contamination of the analyser and then flushed with nitrogen for a few minutes. For the rest of the day, the analyser alternately measures samples S2 and S3.

Following the purge section, the vessel also contains a compression stage, as the SOFC modules require an inlet pressure of 4 bar(g). After the compressor, the gas is cooled with a cooler and finally enters the last reactor, which is used to remove oil particles, before it leaves the container and feeds the SOFC modules.

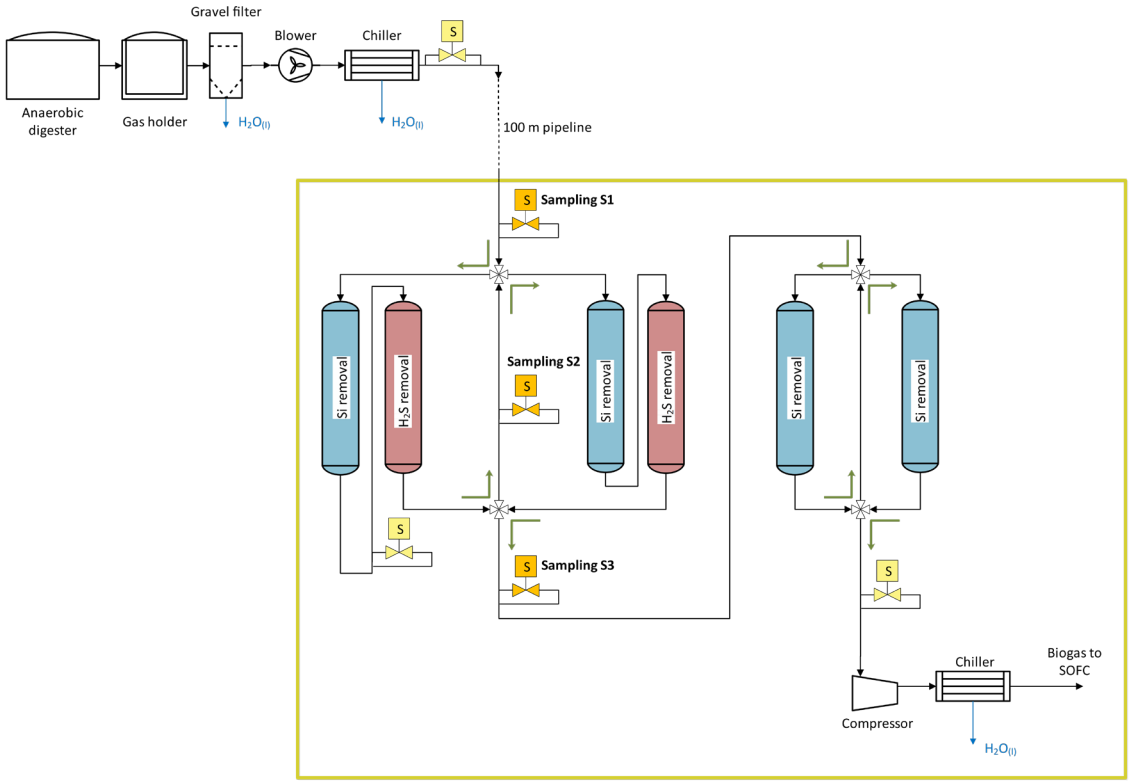

Figure 6. Layout of the cleaning unit. The yellow area shows the equipment included in the gas cleaning container.

	H_2S	O_2	CO_2	CH_4	Siloxane
Measurement principle	Electrochemical	Electrochemical	NDIR	NDIR	NDIR
Measurement range	0-500 ppm	0-22 vol. %	0-100 vol. %	0-100 vol. %	0-100 mgSi/m^3 (D5 eq.)
Detection limit	< 1 ppm	-	≤ ± 0.2%	-	0.1 mgSi/m^3 @ 500 s and 24 °C
Linearity error	< 5%	± 0.5% relative	≤ ± 0.9%	≤ ± 0.9%	-
Drift	< 10%/year	< 3%/month	≤ ± 2%/year	≤ ± 2%/year	< 0.4%/month

Table 3. Qualvista analyzer sensors type and measurement range.

4. Results

The results section includes results from the operation of the purification unit at the WWTP, which were used to validate the performance of the sorbent identified in the experimental phase. The results section includes:

- The analysis of the raw biogas to evaluate the trend of impurities.
- Analysis of the purified biogas to determine the breakthrough of impurities and assess the current status of the sorbents (loading rate).
- Economic analysis and lessons learned, presenting the system costs, together with a list of points on how to improve future replications of the proposed concept.

The entire biogas SOFC system operated for 14,166 hours at the WWTP, producing over 1,546 MWh of electricity and 365 MWh of heat [17]. The purification system was in operation for all working hours plus about 1,000 additional hours during the start-up and test phase in 2017.

4.1 Biogas composition analysis

Raw biogas quality was monitored once per day during the whole plant operation, except for some weeks, due to maintenance activities. Figure 7 shows the results of the raw biogas analysis (sampling S1). The average methane content was 64.25% with some variation in the range of 56-71%. Biogas was always rich in methane even if with some monthly fluctuations. Methane fluctuations are anyway not a problem for the SOFC system which can continuously re-arrange the total biogas flow rate according to the CH_4 content.

The average hydrogen sulfide level has been around 25 ppm, in line with the historical data (18-19 ppm) and the data used for the cleaning system design (20 ppm). Anyway, higher peaks up to 71 ppm and lower peaks until near-zero values (detection limit of the instrument) were also detected. H_2S content in biogas is depending on the biology of the anaerobic digester but also on other treatments which could be performed in the water treatment line. The WWTP performs phosphor removal in the water line employing iron hydroxide and this molecule precipitates also sulfur as a side-effect: when iron hydroxide dosing is increased, H_2S level always shows a reduction in the biogas and vice versa. This is the main reason for the fluctuations detected during the plant operation.

Silicon content was again in line with historical trends, with an average value of 3.5 mg/m^3 and the trend was quite stable during the plant operation, with few peaks close to 10 mg/m^3.

Table 4. Quantified organic silicon compounds and key measurement characteristics [6].

Analysis techniques	**Raw gas analysis**	**Description**
Online NDIR (Qualvista)	3.3-3.7 mg_{Si}/m^3	Total Si
LQ +GC-FID	3.9-4.6 mg_{Si}/m^3	D5
LQ + GC-ICP-MS	3.3-3.5 mg_{Si}/m^3	D5
SPA + ATD	1.38 mg_{Si}/m^3	Sum of L3, L5, D3, D4, D5, D6
Methanol adsorption + CD	1.99 mg_{Si}/m^3	Sum of L3, L5, D3, D4, D5, D6

An external laboratory was also involved in the analysis of the raw biogas to validate the measurements of the online analyser with regard to siloxanes. During the day of the analysis, the laboratory determined 5.39 mgSi/m^3 using a thermal desorption method (UNI

EN ISO 16017-1: 2002 [31]) and 7.59 mgSi/m^3 using a chemical desorption method (UNI CEN /TS 13649: 2015 [32]). The online gas analyser determined an average silicon content of 6.08 mgSi/m^3 on the same day, which is in agreement with the results of the external laboratory. A more detailed cross-analysis was performed using different analytical methods from the Paul Scherrer Institute (Switzerland) and the Dutch Metrology Institute (Netherlands). Table 4 shows the results of the cross analysis with different analytical techniques. The silicon content of the raw gas determined with the online gas analyser agrees with the values determined with the sampling analysis with Liquid Quenching (LQ) via GC-ICP-MS and is similar to the value determined with LQ followed by GC-FID. The average silicon concentration measured during the sampling period, when other offline samples were also taken, is 3.5 mgSi/m^3 [6].

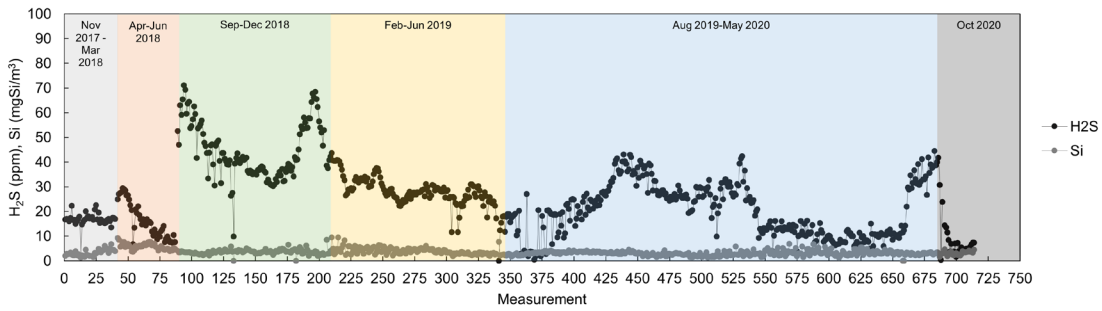

a)

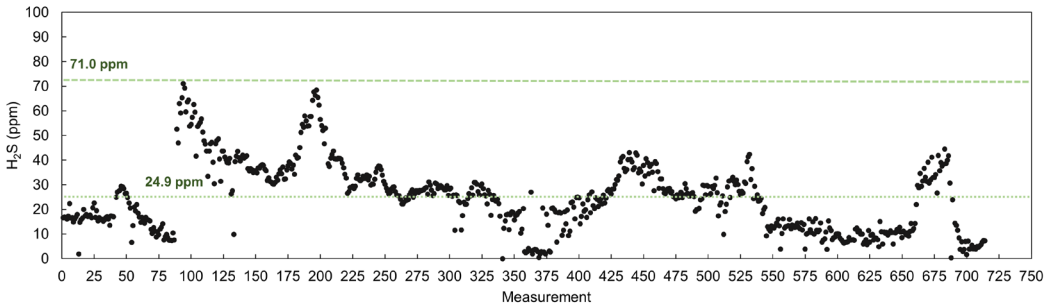

b)

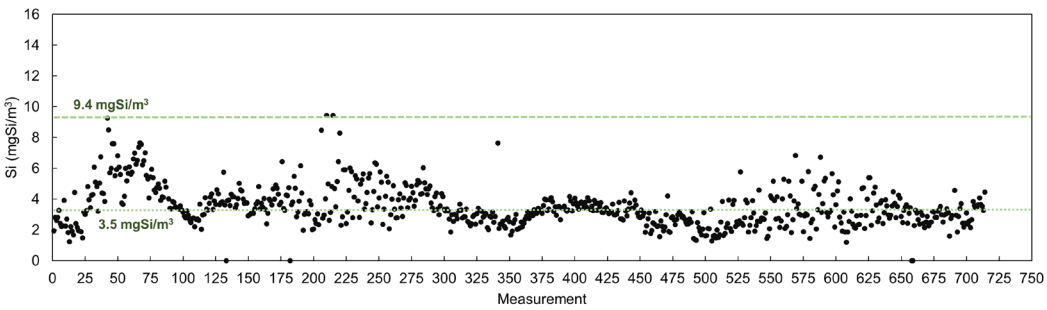

c)

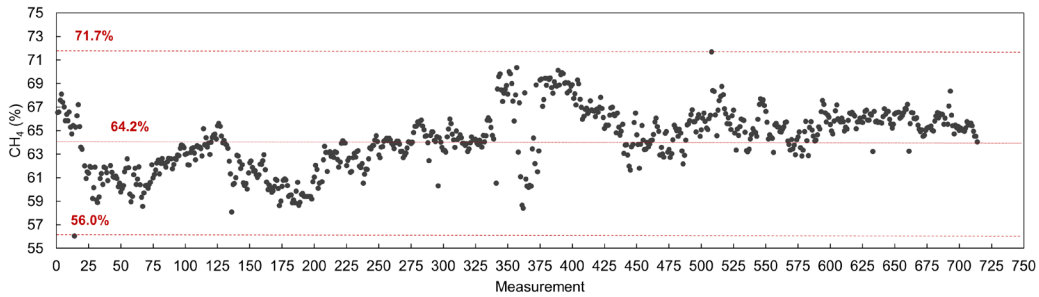

d)

Figure 7. Raw biogas composition (sampling S1). a) focus on the timeline for the available measurement. b) H_2S (ppm). c) Total silicon (mg/m^3). d) Methane (%).

4.2 Sorbents performance

The sorbents did not reach breakthrough for both sulphur and siloxanes after more than 15,000 hours of operation. The values for the clean gas leaving the plant (sampling S2 and S3) are shown in Figure 8. The number of measurements is higher than the one for raw biogas since the clean side was continuously monitored during the day, while the raw side was measured only once per day.

The data for H_2S at the outlet of the purification unit were always zero (except for a few measurements related to problems and malfunctions of the analyser, e.g. at low flow), which means that the hydrogen sulphide content was always below the detection limit of the instrument. In contrast, some noise was always present in the analysis of siloxanes, with fluctuations in the range of 0-1 mgSi/m^3. Possible interactions causing these problems are those with limonene in the biogas stream, as confirmed by Qualvista. Either way, breakthrough has not been achieved as the noise consists of oscillations varying from zero to non-zero values, but always with a positive-negative derivative. A true breakthrough would indeed cause an always positive (or zero) derivative. The results on the pure gas side were also confirmed by the activities carried out with a number of external research centres and laboratories, as described in [6].

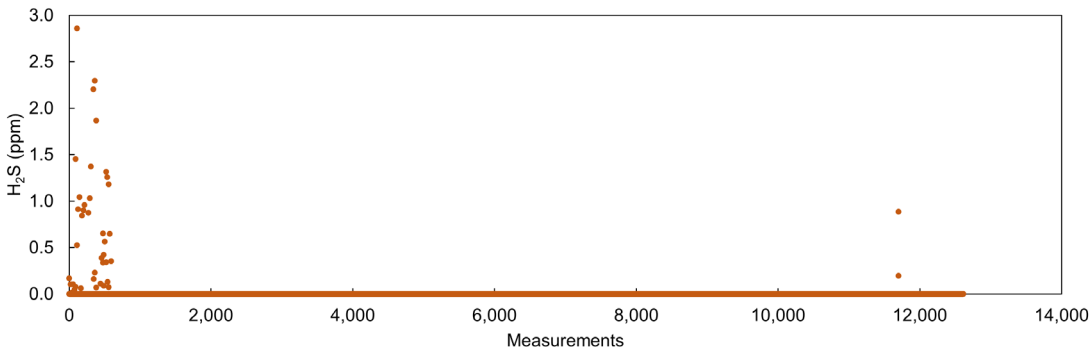

a)

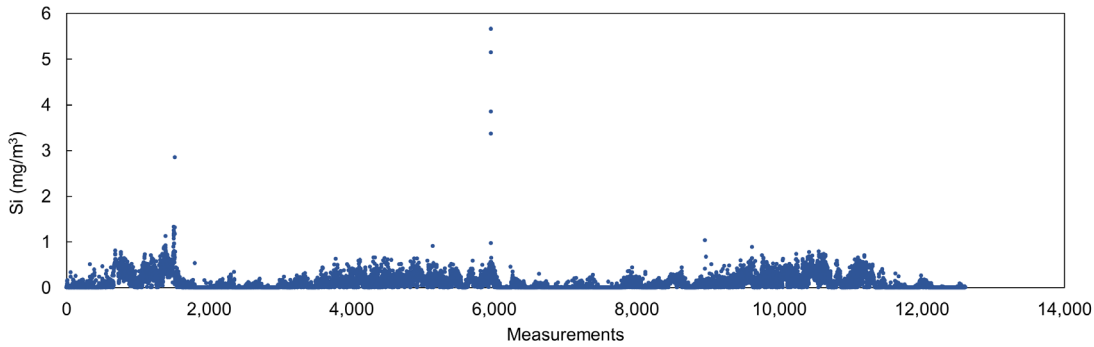

b)

Figure 8. Clean biogas composition (sampling S2 and S3). a) H_2S (ppm). b) Total silicon (mg/m^3).

Based on the values for the concentration of the impurities at the inlet, the flow rate of the biogas fed to the SOFC modules and the clean gas composition, the loading rate of the sorbents was evaluated. One of the main differences between the design phase and the real operation phase of the plant was the lower biogas flow rate fed to the SOFC modules. This is due to the unavailability of the third SOFC module (which was not installed in the project but was considered in the design phase) and the fact that the two modules were only operated in parallel for a few weeks. The total biogas flow was thus one third or even less than the design value, and this is the main reason for the reduced loading rate.

During the above-mentioned operating time, the sorbents (especially the first two reactors) loaded about 7.9 kg of H_2S and 0.7 kg of silicon, respectively. Based on these data, the current adsorption capacity was evaluated and compared with the values obtained during the experimental phase (Table 5). As far as H_2S is concerned, the system used 35% of the potential loading capacity measured in the laboratory, while only 1.8% of the siloxanes were used. As already noted in the experimental phase, sulphur is still the limiting element that will achieve breakthrough first.

Contaminant	**H_2S**	**Si**
Sorbent	AirDep CKC	AirDep C64
Loaded mass (kg)	7.91	0.70
Current loading rate (%)	3.16%	0.28%
Current adsorption capacity	31.63 mgS/g	2.78 mgSi/g
Lab-measured adsorption capacity (mg/g)	84.87 mgS/g	151 mgSi/g
Already exploited adsorption potential	35.08%	1.84%

Table 5. Sorbents loading rate evaluation.

4.3 Economic analysis

The final part of the paper deals with the economic evaluation of the system presented along with a possible revised design to reduce space requirements and costs.

The cost of the presented cleaning solution is about 220 k€ and the system was designed for a total power of 174 kW (3 SOFC modules of 58 kW each). The specific cost based on electrical power is 1,270 €/kW, which is in line with the values proposed at the Argonne Labs workshop

on gas cleaning for fuel cells [33]. The total costs are composed of the following items, as shown in Table 6:

- The biogas purification and compressor vessel (74%) is the purification unit described earlier and shown in Figure 6 (yellow area, excluding the cost of sorbents) and is the largest cost item.
- The biogas recovery system (17%) consists of a blower and a chiller, which are used to transfer the biogas from the anaerobic digester area to the SOFC area. Due to the long distance and the design of the reactor, the available pressure at the biogas inlet (15-20 mbar) was not sufficient. This cost is highly site dependent and could be avoided in future replications.
- Technical support (4%).
- Siloxane and sulphur fills (2%) are the costs for the sorbent (material price).
- Transport costs (1%).

Table 6. Cost share of the current biogas purificaton unit layout.

Component	Share of the total cost
Biogas cleaning and compression container	74%
Biogas recovery system	17%
Technical assistance	4%
Siloxane sorbent filling	2%
Sulfur sorbent filling	2%
Transport cost	1%

The re-engineering aimed at learning the lessons from the cleaning plant design and developing an optimised solution for replicating the biogas SOFC concept [34]. Based on the original design, some assumptions were made, which were also discussed with Biokomp, and the following changes were made to the system layout:

- The lead-and-lag configuration was removed. Thanks to the high performance of the sorbents, which was confirmed by real operation on site, it was considered to carry out the replacement - every 1-2 years - together with other planned maintenance works on the compressor or the SOFC modules when the plant was completely shut down. This new layout also avoids the cost of valves required to switch between lead and lag reactor.
- Reduction of the total number of tanks from 6 to 2. Based on the present results, maintenance could be planned with only two tanks (an additional tank could be considered for safer operation, but even in this case three would be the maximum number of tanks required).
- Reducing container length. By reducing the number of vessels and their arrangement, the length of the container could be reduced by 50% (from 40 to 20 feet).
- Biogas recovery system partially excluded. Since biogas purification and SOFC location are highly site-dependent, these costs were excluded in the re-engineering to

provide a more general layout for replication of the system.

- Gas analyser. The gas analyser was not removed from the system design, but a simplified solution could be chosen. Siloxanes were less critical and more stable than expected, and sulphur is the only impurity that needs to be detected continuously. The H2S measurement could be done with a commercial electrochemical sensor, while silicon could be measured seasonally by an external laboratory.
- The cost of replacing the sorbents includes fixed costs such as crane rental, transport, disposal and duties, and it might be cheaper to replace the sorbents for sulphur and siloxanes together (at the time of sulphur breakthrough) than to carry out two separate maintenance operations.

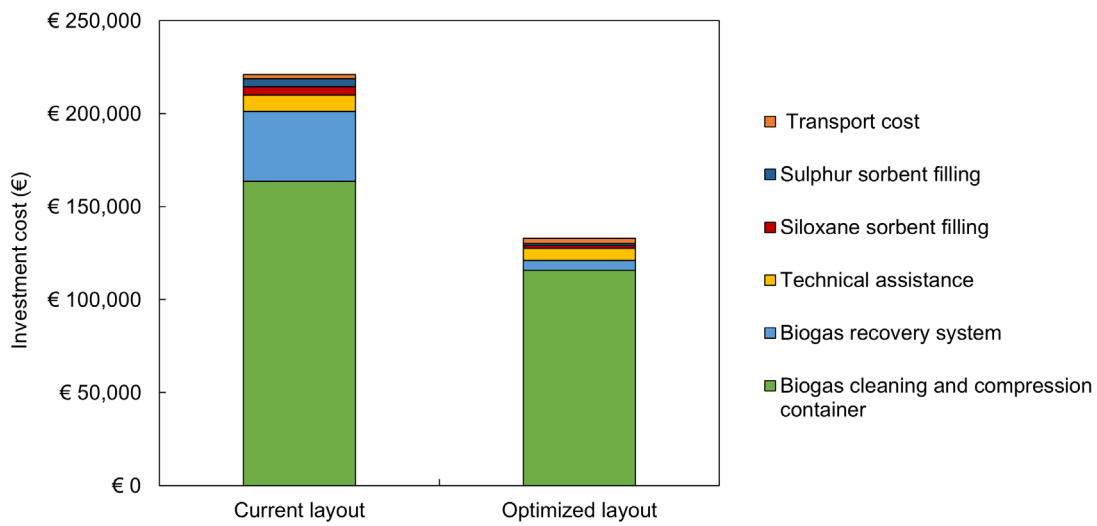

Figure 9. Current vs optimized costs for the cleaning solution.

The optimised costs are shown in Figure 9. The total investment cost for the optimised solution is 132.5 k€, equal to 761 €/kW, which is closer to the short-term target for cleaning FC set by Argonne Lab's Cleaning for FC workshop, which corresponds to $500/kW [33]. This solution could be used in replications of the proposed biogas SOFC concept if the input biogas has a similar composition to that investigated in this study (sewage gas from a wastewater treatment plant). For dirtier or more complex biogas matrices [5] (agricultural biogases, OFMSW, etc.), the purification scope and cost might increase and a first stage sulphur removal might be required.

Conclusions

The current work focuses on the design and operation of the biogas purification plant to remove H_2S and siloxanes. The design started with a historical biogas analysis to understand the most critical impurities and their levels. Based on this initial data, an experimental activity was conducted to understand the performance of commercial sorbents and define the optimal solution for the digester gas.

The results from the operation of the purification plant show that the performance of the sorbents is consistent with the performance determined in the experimental phase. The quality

of the raw biogas was analysed to understand the variations of the input impurities over time. While the silicon content was quite stable in the range of 0-9 mg Si/m^3, larger fluctuations were observed for H_2S, with peak values up to 70 ppm. The loading rate of the CKC sorbent for H_2S removal is 35% of the potential loading capacity measured in the laboratory, while that of the C64 sorbent for siloxane removal is 1.8%. A final economic evaluation is also presented, together with some technical findings that could help in a future revision with reduced investment costs (from 1,270 to 760 €/kW).

Adsorption-based purification solutions are technically and economically feasible for simple (in terms of composition) biogases such as the wastewater analysed in this paper. Mercaptans and H_2S are easily removed by activated carbon in the presence of oxygen, while siloxanes can only be removed by physisorption due to their larger dimension.

The design proves more difficult when other compounds such as organic sulphur, aromatic compounds and high H_2S levels are present, requiring different sorption stages (with the risk of co-adsorption effects) and upstream bulk sulphur removal.

Future work will address the analysis of a cost-effective solution for agricultural and waste-derived biogas, which usually has a more complex composition matrix.

Nomenclature

ATD	Analytical Thermal Desorption
CHP	Combined Heat and Power
CD	Chemical Desorption
FC	Fuel Cell
FID	Flame Ionization Detector
GT	Gas Turbine
ICE	Internal Combustion Engine
ICP	Inductively Coupled Plasma
LQ	Liquid Quench
MS	Mass Spectrometry
NDIR	Non Dispersive Infra Red
OFMSW	Organic Fraction of Munucial Solid Waste
P.E.	People Equivalent
PM	Particulate Matter
ppm	Part Per Million
SOFC	Solid Oxide Fuel Cell
SPA	Solid-Phase Adsorption
VOC	Volatile Organic Compounds
WWTP	Waste Water Treatment Plant

Acknowledgments

The author would like to thank: SMAT s.p.a. for hosting the site and providing continuous support during the entire plant operation, Biokomp Srl for the cooperation in designing and operating the cleaning unit, Qualvista Ltd for their continuous support during the operation and maintenance of the online biogas analyzer, and the Steps research group (prof. Massimo Santarelli, prof. Andrea Lanzini) for supervising the whole activity.

Reference

[1] EBA, EBA Statistical Report 2020, Brussels, Belgium, 2020. https://www.europeanbiogas.eu/eba-statistical-report-2020/.

[2] D. Papurello, S. Silvestri, S. Modena, Biogas trace compounds impact on high-temperature fuel cells short stack performance, Int. J. Hydrogen Energy. 46 (2021) 8792–8801. https://doi.org/10.1016/j.ijhydene.2020.11.273.

[3] A. Lanzini, H. Madi, V. Chiodo, D. Papurello, S. Maisano, M. Santarelli, J. Van herle, Dealing with fuel contaminants in biogas-fed solid oxide fuel cell (SOFC) and molten carbonate fuel cell (MCFC) plants: Degradation of catalytic and electro-catalytic active surfaces and related gas purification methods, Prog. Energy Combust. Sci. 61 (2017) 150–188. https://doi.org/10.1016/j.pecs.2017.04.002.

[4] S.A. Saadabadi, A. Thallam Thattai, L. Fan, R.E.F. Lindeboom, H. Spanjers, P. V. Aravind, Solid Oxide Fuel Cells fuelled with biogas: Potential and constraints, Renew. Energy. 134 (2019) 194–214. https://doi.org/10.1016/j.renene.2018.11.028.

[5] A. Calbry-Muzyka, H. Madi, F. Rüsch-Pfund, M. Gandiglio, S. Biollaz, Biogas composition from agricultural sources and organic fraction of municipal solid waste, Renew. Energy. 181 (2022) 1000–1007. https://doi.org/10.1016/J.RENENE.2021.09.100.

[6] A. Calbry-Muzyka, M. Tarik, M. Gandiglio, J. Li, D. Foppiano, I. de Krom, D. Heikens, C. Ludwig, S. Biollaz, Sampling, on-line and off-line measurement of organic silicon compounds at an industrial biogas-fed 175-kWe SOFC plant, Renew. Energy. 177 (2021) 61–71. https://doi.org/10.1016/J.RENENE.2021.05.047.

[7] N. de Arespacochaga, C. Valderrama, C. Mesa, L. Bouchy, J.L. Cortina, Biogas deep clean-up based on adsorption technologies for Solid Oxide Fuel Cell applications, Chem. Eng. J. 255 (2014) 593–603. https://doi.org/10.1016/j.cej.2014.06.072.

[8] N. De Arespacochaga, C. Valderrama, C. Peregrina, C. Mesa, L. Bouchy, J.L. Cortina, Evaluation of a pilot-scale sewage biogas powered 2.8 kW Solid Oxide Fuel Cell: Assessment of heat-to-power ratio and influence of oxygen content, J. Power Sources. 300 (2015) 325–335. https://doi.org/10.1016/j.jpowsour.2015.09.086.

[9] A. Baldinelli, L. Barelli, G. Bidini, G. Cinti, Micro-cogeneration based on solid oxide fuel cells: Market opportunities in the agriculture/livestock sector, Int. J. Hydrogen Energy. 46 (2021) 10036–10048. https://doi.org/10.1016/j.ijhydene.2020.04.226.

[10] A. Baldinelli, L. Barelli, G. Bidini, On the feasibility of on-farm biogas-to-electricity conversion: To what extent is solid oxide fuel cells durability a threat to break even the initial investment?, Int. J. Hydrogen Energy. 43 (2018) 16971–16985. https://doi.org/10.1016/j.ijhydene.2018.02.031.

[11] N. Kamalimeera, V. Kirubakaran, Prospects and restraints in biogas fed SOFC for rural energization: A critical review in indian perspective, Renew. Sustain. Energy Rev. 143 (2021) 110914. https://doi.org/10.1016/j.rser.2021.110914.

[12] H. Wasajja, R.E.F. Lindeboom, J.B. van Lier, P. V. Aravind, Techno-economic review of biogas cleaning technologies for small scale off-grid solid oxide fuel cell applications, Fuel Process. Technol. 197 (2020) 106215. https://doi.org/10.1016/j.fuproc.2019.106215.

[13] D. Thiruselvi, P.S. Kumar, M.A. Kumar, C.H. Lay, S. Aathika, Y. Mani, D. Jagadiswary, A. Dhanasekaran, P. Shanmugam, S. Sivanesan, P.L. Show, A critical review on global trends in biogas scenario with its up-gradation techniques for fuel cell and future perspectives, Int. J. Hydrogen Energy. (2020).

https://doi.org/10.1016/j.ijhydene.2020.10.023.

[14] M. Gandiglio, D. Drago, M. Santarelli, Techno-economic Analysis of a Solid Oxide Fuel Cell Installation in a Biogas Plant Fed by Agricultural Residues and Comparison with Alternative Biogas Exploitation Paths, Energy Procedia. 101 (2016) 1002–1009. https://doi.org/10.1016/j.egypro.2016.11.127.

[15] Sysadvance, HOMEPAGE - Sysadvance, (2022). https://sysadvance.com/ (accessed July 21, 2022).

[16] M. Gandiglio, A. Lanzini, M. Santarelli, M. Acri, T. Hakala, M. Rautanen, Results from an industrial size biogas-fed SOFC plant (the DEMOSOFC project), Int. J. Hydrogen Energy. 45 (2020) 5449–5464. https://doi.org/10.1016/j.ijhydene.2019.08.022.

[17] H. Langnickel, M. Rautanen, M. Gandiglio, M. Santarelli, T. Hakala, M. Acri, J. Kiviaho, Efficiency analysis of 50 kWe SOFC systems fueled with biogas from waste water, J. Power Sources Adv. 2 (2020) 100009. https://doi.org/10.1016/j.powera.2020.100009.

[18] Biokomp Srl, Biokomp official website, (2017). http://www.bio-komp.com/ (accessed February 1, 2022).

[19] D. Drago, The sulfur issue in fuel cell based cogenerative systems, Politecnico di Torino, 2017.

[20] D. Papurello, S. Silvestri, A. Lanzini, Biogas cleaning: Trace compounds removal with model validation, Sep. Purif. Technol. 210 (2019) 80–92. https://doi.org/10.1016/j.seppur.2018.07.081.

[21] D. Papurello, M. Gandiglio, A. Lanzini, Experimental Analysis and Model Validation on the Performance of Impregnated Activated Carbons for the Removal of Hydrogen Sulfide (H2S) from Sewage Biogas, Processes. (2019). https://doi.org/10.3390/pr7090548.

[22] SulfaTrap, SulfaTrap – Global Leader in Sulfur Removal, (2022). https://sulfatrap.com/ (accessed February 1, 2022).

[23] AirDep, AirDep - Impianti di depurazione aria e biogas San Bonifacio - Verona, 2016. (n.d.). https://www.airdep.eu/ (accessed May 8, 2022).

[24] Siegrist GmbH, Product overview: Leopold Siegrist GmbH, 2022. (n.d.). https://siegrist.de/ (accessed May 5, 2022).

[25] Qualvista Ltd, Qualvista Ltd - official website, 2022. (n.d.). http://www.qualvista.com/ (accessed May 5, 2012).

[26] D. Papurello, M. Gandiglio, J. Kafashan, A. Lanzini, Biogas Purification : A Comparison of Adsorption Wood-Derived Char Using Isotherm Equations, Processes. 7 (2019) 774. https://doi.org/doi:10.3390/pr7100774.

[27] D. Papurello, M. Gandiglio, J. Kafashan, A. Lanzini, Biogas Purification: A Comparison of Adsorption Performance in D4 Siloxane Removal Between Commercial Activated Carbons and Waste Wood-Derived Char Using Isotherm Equations, Processes. 7 (2019) 774. https://doi.org/10.3390/pr7100774.

[28] L. Barelli, G. Bidini, N. de Arespacochaga, L. Pérez, E. Sisani, Biogas use in high temperature fuel cells: Enhancement of KOH-KI activated carbon performance toward H2S removal, Int. J. Hydrogen Energy. 42 (2017) 10341–10353. https://doi.org/10.1016/J.IJHYDENE.2017.02.021.

[29] R. Sitthikhankaew, D. Chadwick, S. Assabumrungrat, N. Laosiripojana, Effects of humidity, O2, and CO2 on H2S adsorption onto upgraded and KOH impregnated activated carbons, Fuel Process. Technol. 124 (2014) 249–257.

https://doi.org/10.1016/J.FUPROC.2014.03.010.

[30] I. Isik-Gulsac, Investigation of impregnated activated carbon properties used in hydrogen sulfide fine removal, Brazilian J. Chem. Eng. 33 (2016) 1021–1030. https://doi.org/10.1590/0104-6632.20160334s20150164.

[31] UNI Standard, UNI EN ISO 16017-1:2002 - Indoor, ambient and workplace air - Sampling and analysis of volatile organic compounds by sorbent tube/thermal desorption/capillary gas chromatography - Pumped sampling, (2002). http://store.uni.com/catalogo/index.php/uni-en-iso-16017-1-2002.html (accessed March 11, 2019).

[32] UNI Standard, UNI CEN/TS 13649:2015 - Stationary source emissions - Determination of the mass concentration of individual gaseous organic compounds - Sorptive sampling method followed by solvent extraction or thermal desorption, (2015). http://store.uni.com/catalogo/index.php/uni-cen-ts-13649-2015.html?___store=en&josso_back_to=http%3A%2F%2Fstore.uni.com%2Fjosso-security-check.php&josso_cmd=login_optional&josso_partnerapp_host=store.uni.com&___from_store=it (accessed March 11, 2019).

[33] Argonne National Laboratory, U.S. Department of Energy, Fuel Cell Technologies Office, Gas Clean-Up for Fuel Cell Applications Workshop - March 6-7, 2014, 2014. https://energy.gov/sites/prod/files/2016/04/f30/fcto_gas_cleanup_workshop_report.pdf (accessed January 8, 2018).

[34] DEMOSOFC project official website, (2016). www.demosofc.eu (accessed December 20, 2015).