Dynamic Response of Infilled Frames Subject to Accidental Column Losses

Dynamic response of infilled frames subject to accidental column losses

Fabio Di Trapani[1], Giovanni Tomaselli[1], Antonio Pio Sberna[1], Marco Martino Rosso[1], Giuseppe Carlo Marano[1], Liborio Cavaleri[2] and Gabriele Bertagnoli[1]

[1]Dipartimento di Ingegneria Strutturale, Edile e Geotecnica, Politecnico di Torino, Corso Duca degli Abruzzi 24, 10121 Turin, Italy
fabio.ditrapani@polito.it
[2]Dipartimento di Ingegneria, Università degli Studi di Palermo, Viale delle Scienza, 90128, Palermo, Italy

Abstract. Building structures response to accidental actions such as impact or explosions depends on their robustness, and redundancy of the structural system. When a column is lost, the initial structural configuration rapidly evolves into a different resisting system, and this occurs in a dynamic regime. The paper investigates the role of infilled frames in the dynamic response of a 2D frame subject to an instantaneous column removal case. A newly developed equivalent-strut approach is used to model the mechanical response of the infills. The simulations are carried out using the OpenSees software platform, comparing the dynamic responses with and without considering the influence of masonry infills. Results show that infill contribution provides substantial modification of the resisting mechanism and that they can be crucial to the limitation of the progressive collapse.

Keywords: Progressive collapse, Robustness, Infilled frames, Reinforced concrete, OpenSees

1. Introduction

Progressive collapse analysis and robust design of structures and infrastructures are emerging as hot topics in the last years for both researchers and practitioners. Following the basic principle of robustness-based design that, the effect of an accidental damage suffered by a structure, must not be disproportionate with respect to the cause that generated it. For what concerns reinforced concrete frame building structures, the most critical condition inducing progressive collapse is generally related to the loss of a base column due, for instance, to impacts or explosions. In these conditions the damage mechanism involves the beams converging to the column, which develop a resisting mechanism evolving in three sequential steps: a) a flexural resistant mechanism; b) a post-cracking arching mechanism; c) a catenary mechanism, triggering under large displacements regime [1-2]. The damage evolution is accentuated by the effect of gravity inertial forces arising and can be stopped within one of these three phases only if adequate resistance supply is available to achieve a new equilibrium

configuration. In this framework, the eventual presence of the infills within the portion of frames involved in the damage mechanism may play a prominent role because of the major strength and stiffness. This has been recently highlighted both experimentally and numerically (Farazman et al. [3], Xavier et al. [4], Shan et al. [5], Qian et al. [6], Li et al. [7], Di Trapani et al. [8]). These studies provided modeling strategies for the infills to reproduce the progressive collapse response in terms of push-down capacity (vertical reaction vs. vertical displacement). However, to be able to provide a capacity/demand assessment under a sudden column loss, the capacity should be compared to the demand, which unavoidably must be evaluated under a dynamic regime. In this framework this study investigates the role of infills in the dynamic response of a 2D ten-floor frame subject to an instantaneous column removal case. A recently developed multi-strut macro model is used to replace the effect of the infills within the RC frame structure. The time-history response is compared to that of the same frame analyzed without including the infills. Results showed significantly different dynamic responses in the considered cases, revealing also that infills can be fundamental to the limitation of a progressive collapse mechanism.

2. Progressive collapse modelling of an infilled frame

2.1 Modeling of the concrete frame

A 2D perimetral RC can be effectively modelled using nonlinear displacement-based beam/colums, with distributed plasticity fiber-sections elements. Beams and columns composing the frame were modeled as. The fiber cross-sections of RC elements were assembled by assigning different uniaxial stress–strain laws to concrete core and cover fibers in order to account for stirrups confinement, using the material Concrete02 model. Confined (f_{cc0}, f_{ccu}, ε_{cc0}, ε_{ccu}) and unconfined (f_{c0}, f_{cu}, ε_{c0}, ε_{cu}) concrete parameters are evaluated according to the model by Razvi and Saatcoglu [10] (Fig. 1a). Given the large displacements and damage achieved by the frame after the loss of a base column, the steel rebars were modeled using the Hysteretic material backbone curve in order to simulate fracture in tension, in correspondence of the ultimate stress-strain capacity point (f_t, ε_{su}), and buckling in compression (if any) in correspondence of the stress-strain buckling point (σ^*,ε^*) evaluated according to the Dhakal and Maekawa [11] model (Fig. 1b).

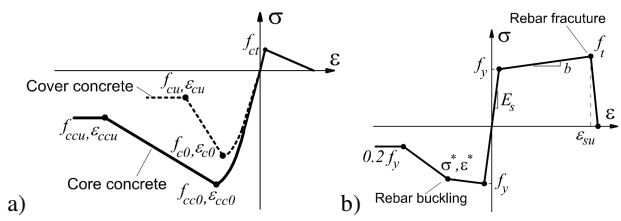

Fig. 1. Adopted stress-strain model for: a) Confined and unconfined concrete; b) Steel rbars

2.2 Modeling of masonry infills

The effect of masonry infills is modelled by using the macro-element model by Di Trapani et al. [12]. The latter is based on the following experimental observations about the progressive collapse mechanism of an infilled frame:

- undamaged portions of masonry form in correspondence of the beam-column joints, due to the confining action masonry receive from the frame.
- These portions behave as rigid parts, inducing a migration of the position of the plastic hinges towards the inner parts of the beams.
- For the intermediate floors the plastic hinges in the beams may be found at the interception of the beam axis and the line joining the hinges at the upper and lower floors, and this means that, in multi-story infilled frames, the position of the plastic hinges depends on the story level.
- the central zones of masonry infills are subjected to strong diagonal compression, which induces the sliding of bed joints and diagonal crushing in some cases.

In consideration of this, infills are modeled with three (struts S1 and S2) as shown in Fig. 2. S1 struts model the inner part of the infill, which is subjected to diagonal compression forces, and act as no-tension inelastic compressive truss. Struts S2 are used to simulate the damage mechanism in which masonry at corners remains almost intact, therefore they're supposed with infinite stiffness and strength. Those struts connect the plastic hinges in the beam from the lowest floor to the highest floor. The product $\alpha_b l_b$ (α_b<1) represents the position of the connection node of the beam with the S2 strut, and is located in the point where the maximum migration of the plastic hinge is found. This consequently defines the angle of inclination of the struts and the formation of the other plastic hinges in the other floors along the length l_b.

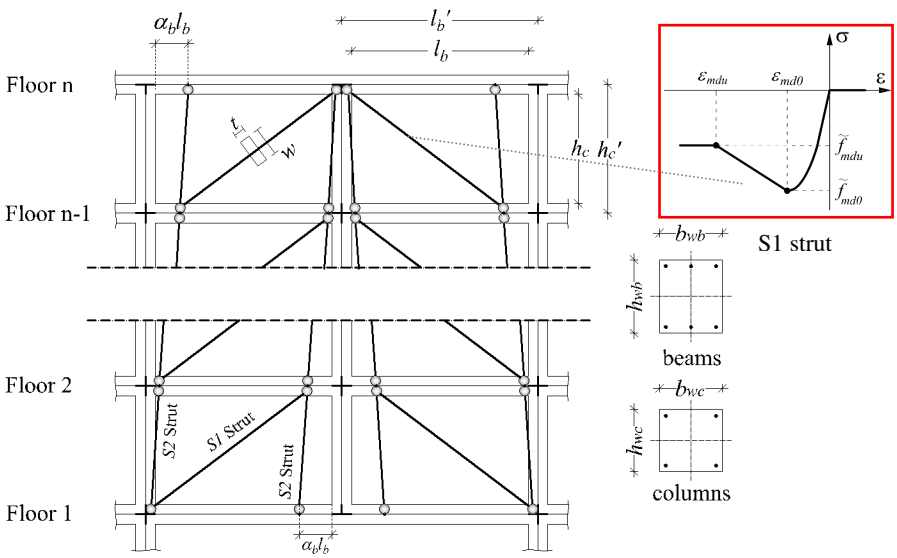

Fig. 2. Model schematization and geometric parameters of an infilled frame

To define the S1 strut cross-section dimensions and material properties, the procedure explicated in Di Trapani et al. [12] is applied. The material model requires the definition of four parameters $\tilde{f}_{md0}$ (peak-strength), $\tilde{f}_{mdu}$ (ultimate-strength), ε_{md0} (peak-strain), ε_{mdu} (ultimate strain) (Fig. 3). The uniaxial stress-strain response of S1 strut is related to masonry infill diagonal strength f_{md0}, obtained by the empirical relationship provided by Di Trapani et al. [13] and is modulated by the coefficient ξ ($0.25 \leq \xi \leq 1$), which considers a potential strength reduction as a function of the effective interaction between masonry infills and concrete frame ($\tilde{f}_{md0} = \xi f_{md0}$). Parameters ξ and α_b depend on the frame-infill stiffness and strength ratios and are evaluated by two specific empirical formulas provided by Di Trapani et al. [12].

3. Case studies structures

The case study of a ten-floor perimetral RC frame is considered (Fig. 3a). The frame has regular span lengths l_b' =6.3 m and floor height h_c' =3.4 m. The beams and the columns have the same dimension at on each floor. In detail beams have a cross-section of 30 x 50 cm (b_{wb} x h_{wb}), while columns have cross-section of 40 x 80 cm (b_{wc} x h_{wc}). Masonry infills consist of hollow clay brick having thickness t = 30 cm and. These latter are supposed being located only in the two central, where it is supposed that the ground storey column is lost (Fig. 3a).

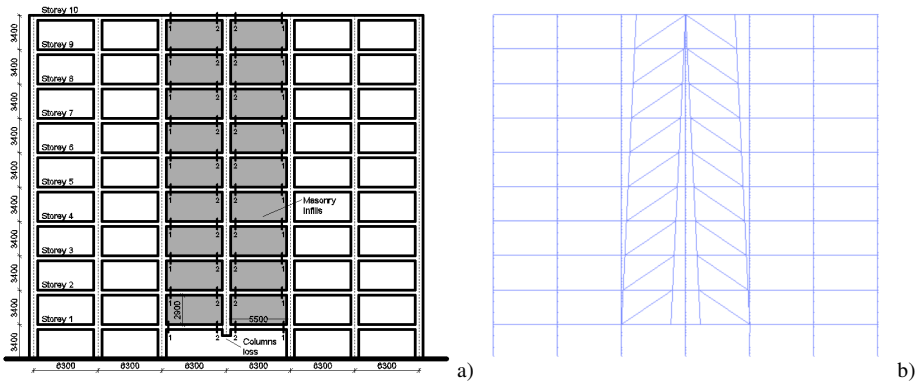

Fig. 3. Case study structure: a) Geometric details of the frame; b) Model.

The material mechanical details of the concrete structure and the masonry infills are listed in Table 1. In particular E_{m1} and E_{m2} are the elastic moduli of masonry in the horizontal and vertical directions and $\tilde{E}_m$ is the conventional elastic modulus of masonry, evaluated as the $\tilde{E}_m = \sqrt{E_{m1} \cdot E_{m2}}$, f_{vm} is the shear strength of masonry and $\tilde{f}_m = \sqrt{f_{m1} \cdot f_{m2}}$, is the conventional strength of the masonry, which takes into account the compressive strengths of the masonry (f_{m1} and f_{m2}) along the two orthogonal directions.

Table 1. Material details of masonry infills, concrete and steel.

	E_{m2} (MPa)	E_{m1} (MPa)	$\tilde{E}_m$ (MPa)	f_{vm} (MPa)	f_{m2} (MPa)	f_{m1} (MPa)	$\tilde{f}$ (MPa)
Masonry infills	6401	5032	5675	1.07	8.66	4.18	6.02
	E_c (MPa)	f_{cc0} (MPa)	f_{ccu} (MPa)	ε_{cc0} -	ε_{ccu} -	f_y/f_t (MPa)	ε_{su} (%)
Confined concrete /Steel	31476	28.82	5.76	0.0035	0.014	450/540	12
Unconfined concrete / Steel	31476	25.00	5.00	0.0020	0.011	450/540	12

The above-described structure has been analyzed considering two different designs for the reinforcement of the concrete frame are considered, that is a seismically designed reinforcement and a non-seismically designed reinforcement. In the first case the, design of the reinforcement was carried out according to the current Italian Technical code (NTC 2018 [14]). In the second case, the reinforcement was designed to resist only gravity loads, as commonly occurring in Italy and southern Europe from 1950 to 1980. In both cases, the progressive collapse response was assessed considering the presence of the infill (IF) and compared to that of the bare frame (BF). A summary of the considered cases is reported in Table 2, while the details of the reinforcement for the seismically designed and non-seismically designed configuration are given in Table 3.

Table 2. Analyzed cases studies

Case study	Infills	Seismic detailing
BFS	No	Yes
IFS	Yes	Yes
BFNS	No	No
IFNS	Yes	No

Table 2. Longitudinal reinforcement details

Seismically designed frame						
	Stories 1-2-3-4		**Stories 5-6-7**		**Stories 8-9-10**	
Cross-Section	Top reinf.	Bottom reinf.	Top reinf.	Bottom reinf.	Top reinf.	Bottom reinf.
1-1	8 Φ 16	4 Φ 16	6 Φ 16	3 Φ 16	4 Φ 16	3 Φ 16
2-2	8 Φ 16	4 Φ 16	6 Φ 16	3 Φ 16	4 Φ 16	3 Φ 16

Non-seismically designed building		
Stories 1-2-3-4-5-6-7-8-9-10		
Cross-Section	Top reinforcement	Bottom reinforcement
1-1	4 Φ 14	2 Φ 14
2-2	4 Φ 14	2 Φ 14

A distributed vertical load q= 25 kN/m is supposed acting on the acting on the beams. In order to perform a time-history analysis consequent to the central column loss, loads are converted into nodal lumped masses as function of the tributary areas and reducded by 50% to simulate the same effect as a distributed load. Therefore, the masse is equal to $ql_b'/2g=79.2t$ for the internal nodes of the frame and $ql_b'/4g=39.6t$ for the limit external nodes of the frame. The dynamic analysis is preformed using a fictitious uniform earthquake ground motion with zero acceleration, and using the "element removal" command to instantaneously remove the central column.

4. Analysis results

Results of the analyses are reported in Fig. 4 in terms of vertical reaction vs. displacement (Fig. 4a) and vs. time (Fig. 4b). In can be firstly observed that the contribution of the infills radically modified the responses of both for the seismically designed frame and the non-seismically designed frame. In fact, while the beams of the bare frame structures achieved the collapse achieving large vertical displacements (Fig. 4a), the infilled frames were subjected to an oscillation around the gravity load value previously carried by the central column. However, it is noteworthy observing that the contribution of the infills in terms of strength increment with respect to the bare frame configuration was noticeable only for the non-seismically designed frame (about +25%). In the case of seismically designed frame this was not actually recognized since the collapse mechanism was arrested in the quasi-elastic stage.

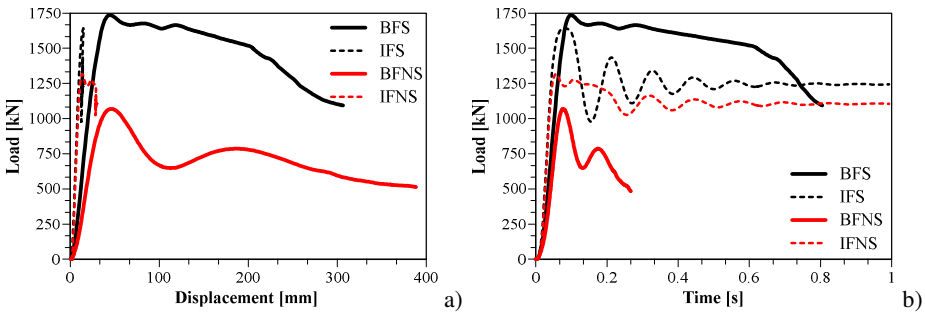

Fig. 4. Global results: a) load vs. displacement; b) load vs. time.

In Fig. 5, results are compared in terms of vertical displacements vs. time. The different magnitude of the vertical displacements occurring at the same time for the bare and infilled structures is evident from the diagrams. The divergence of the time-displacement curves of the bare frames with respect to the infilled ones clearly highlight the collapse mechanism.

Fig. 6 finally shows the magnified deformed shapes of the seismically resistant bare and infilled frames at the same time frame, clearly highlighting the extent of the progressive collapse damage for the bare frame with respect to the infilled one.

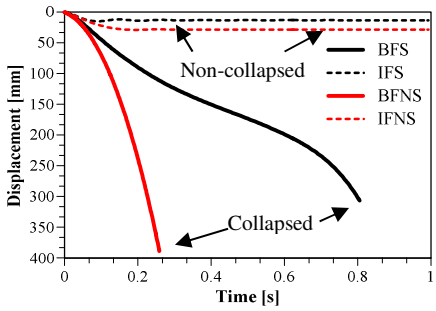

Fig. 5. Global results: displacement vs. time.

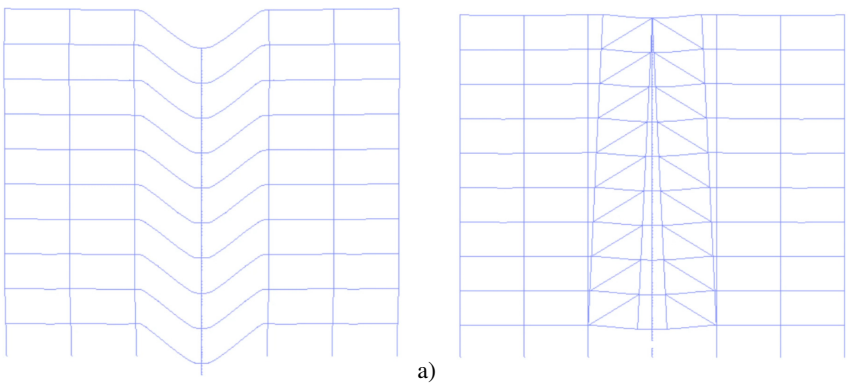

Fig. 6. Deformed shapes at the same time frame: a) seismically designed bare frame; b) seismically designed infilled frame.

5. Conclusions

The simulation of progressive collapse response of frame structures due to accidental column losses is complicated because of the high mechanic and geometric nonlinearity. The complexity of the collapse mechanism is accentuated by the influence of masonry infills which significantly interact with primary RC structures.

The paper presented the dynamic simulation of the progressive collapse response of a ten-storey 2D RC frame under the sudden removal of a central column. The simulation was carried out with and without considering the effect of masonry infills within the structural model. The infills have been modelled using a recently developed equivalent strut approach. From the observation of results, it is evident that infills have the tendency to give a favorable contribution in the case of a sudden column loss. The infills tend to arrest the damage propagation because of the major strength provided to the system and to the internal redistribution of the forces provided by the strut mechanism forming because of the interaction with the primary structures.

References

1. Izzuddin, B.A., Vlassis, A. G., Elghaz1ouli, A. Y., Nethercot, D.A.: Progressive collapse of multi-storey buildings due to sudden column loss. Part I: Simplified assessment framework. Eng. Struct. 30(5), 1308–1318 (2008).
2. Vlassis, A.G., Izzuddin, B.A., Elghazouli, A. Y., Nethercot D.A.: Progressive collapse of multi-storey buildings due to sudden column loss. Part II: Application. Eng. Struct. 30(5), 1424-1438 (2008).
3. Farazman, S., Izzuddin, B.A, Cormie, D.: Influence of Unreinforced Masonry Infill Panels on the Robustness of Multistory Buildings. J. Perform. Constr. Facil. 27(6), 673-682 (2013).
4. Xavier, F.B., Macorini, L. Izzuddin, M.B.: Robustness of Multistory Buildings with Masonry Infill. J. Perform. Constr. Facil. 29(5), B4014004 (2015).
5. Shan, S. D., Li S., Xu S. Y., Xie L. L.: Experimental study on the progressive collapse performance of RC frames with infill walls. Eng. Struct. 111, 80–92 (2016).
6. Qian, K. & Li, B.: Effects of Masonry Infill Wall on the Performance of RC Frames to Resist Progressive Collapse. J. Struct. Eng. 143(9), 04017118 (2017).
7. Li, S., Kose, M.M., Shan, S., Sezen H.: Modeling Methods for Collapse Analysis of Reinforced Concrete Frames with Infill Walls. J. Struct. Eng. 145(4), 04019011 (2019).
8. Di Trapani F., Giordano L., Mancini G.: Progressive Collapse Response of Reinforced Concrete Frame Structures with Masonry Infills. J. Eng. Mech. 146(3), 04020002 (2020a).
9. McKenna F.,. Fenves G.L., Scott M.H : Open system for earthquake engineering simulation. University of California, Berkeley, CA (2000).
10. Razvi S.R., Saatcioglu M.: Strength and Ductility of Confined Concrete. J. Struct. Eng. 118(6), 1590-1607 (1992).
11. Dhakal, R.P., Maekawa, K. : Modeling for Postyield Buckling of Reinforcement. J. Struct. Eng. 128(9), 1139-1147 (2002).
12. Di Trapani F., Tomaselli G., Cavaleri L., Bertagnoli G. : Macro-element model for the progressive collapse analysis of infilled frames. J. Struct. Eng., 147(6), 04021079 (2021).
13. Di Trapani F., Bertagnoli G., Ferrotto M.F., Gino D. : Empirical equations for the direct definition of stress-strain laws for fiber-section based macro-modeling of infilled frames. J. Eng. Mech. 144(11), 04018101 (2018b).
14. NTC (Norme Tecniche Costruzioni). 2018. Nuove norme tecniche per le costruzioni. D.M. II.TT. Gazzetta, January 17, 2018.
15. Cavaleri L., Di Trapani F., Ferrotto M.F., Davì L.: Stress-strain models for normal and high strength confined concrete: Test and comparison of literature models reliability in reproducing experimental results. Ingegneria Sismica 34(3-4),114-137 (2017).
16. Di Trapani F., Sberna A.P., Marano G.C. A new genetic algorithm-based framework for optimized design of steel-jacketing retrofitting in shear-critical and ductility-critical RC frame structures. Eng. Struct. 243, 112684 (2021).