POLITECNICO DI TORINO
Repository ISTITUZIONALE

Processing reflected GPS signals with software receivers for remote sensing applications

Original
Processing reflected GPS signals with software receivers for remote sensing applications / Falco, G., Pini, M., LO PRESTI, L., Cucca, M., Notarpietro, R.. - (2011). (Data Flow From Space to Earth Venice March 21-23, 2011).

Availability:
This version is available at: 11583/2432977 since:

Publisher:

Published
DOI:

Terms of use:

This article is made available under terms and conditions as specified in the corresponding bibliographic description in the repository

Publisher copyright

(Article begins on next page)

28 November 2026

PROCESSING REFLECTED GPS SIGNALS WITH SOFTWARE RECEIVERS FOR REMOTE SENSING APPLICATIONS

Gianluca Falco[(1)], Marco Pini[(1)], Letizia Lo Presti[(2)],
Manuela Cucca[(2)], Riccardo Notarpietro[(2)]

[(1)]Istituto Superiore Mario Boella (ISMB),Via Pier Carlo Boggio 61, 10138 Torino, Italy,
phone: +39 0112276404; e-mail:falco@ismb.it
phone: +39 0112276436; e-mail:pini@ismb.it
[(2)] Electronics Department of Politecnico di Torino, Corso Duca degli Abruzzi 24, 10129 Torino, Italy
phone: +39 0110904033; e-mail: letizia.lopresti@polito.it
phone: + 39 0110904623; e-mail: riccardo.notarpietro@polito.it
phone: +39 0110904033; e-mail: manuela.cucca@polito.it

ABSTRACT

For remote sensing purposes, the Earth's surface can be characterized analysing the reflection of a signal generated from a dedicated sensor which, in turn, receives the scattered waves. Among the possible choices, the GNSS (Global Navigation Satellite System) system becomes an innovative active source for the Earth remote sensing in L band. This work represents the first step in the design of a GNSS-R (GNSS-Reflectometry) instrument based on the N-Gene software receiver. The final target will be the development of a low-cost and portable observing system, which can be easily placed on board of small aircrafts. The paper shows some preliminary results obtained by processing the LOS (Line-of-Sight) and a reflected GPS signal, separately. The investigation has been carried out by analyzing and comparing the output of the two streams both in acquisition and in the tracking stage. Then, a complementary experiment has been performed mixing direct and reflect signals at RF, in order to verify the possibility of detecting the two signals, using a single front end for the design of a simplified system setup.

Keywords: GPS, software receiver, reflected signals.

1. INTRODUCTION and MOTIVATION OF THE WORK

Signals of the Global Positioning System (GPS) can be used for purposes different from navigation and positioning. The advent of PC-based software receivers combined with more efficient computational resources, encourage the use of GPS signals for Earth observations. One of the first paper in the field [1] leveraged scattered signals from the GPS satellite constellation for ocean altimetry. More recently GPS bistatic radar has been used for remote sensing of ocean parameters [3] and soil moisture characterization [13]. Some researchers demonstrated that back scattered GPS signals can be also used for the detection of objects on the Earth's surface [4],[5] and for aircraft altimetry measurements [12],[13]. In GPS bistatic systems, two different antennas are used in order to acquire direct and reflected signals. Comparing some of their properties, such as the signal amplitude and code phase delay, it is possible to characterize the reflecting surface. Software receivers are essential tools in this type of application, because they are able to process GPS signals in real time and, at the same time, store to memory the raw samples at the output of the RF front end for post mission analysis.

In this paper, we present some preliminary results obtained with the N-Gene software receiver [6] that was used to acquire and track sea-reflected GPS signals from a high cliff on the

Sardinia coast. We describe some tests performed with a simplified set up, respect to classical experiments with GPS bistatic radars. Such a set up consists of a Right-Hand Circularly Polarized (RHCP) antenna to capture the direct GPS signal and a Left Hand Circularly Polarized (LHCP) antenna for the reflected one. The signals received by the two antennas were mixed at RF and sent to a standard GPS front end, leaving the task of detecting and processing the two signals to specific routines of the software receiver. On the other hand, with traditional GPS bistatic radars the direct and the reflected signals are conditioned by a custom front end, with two separate channels and a common sampling clock. Although in this case the post-processing is easier, the RF part is more complex and needs an accurate design.
First, we introduce some basic concepts of GNSS-based remote sensing, then we describe the system set up used in practical data collections. We explain some results of the analysis, where we focused on the detection of a secondary peak at the correlator output that reveals the presence of reflected signals. If they can be tracked over time, characteristics of reflecting surface can be derived. Typically when only one correlation peak is observed, only the direct GPS signal is acquired, while if multiple peaks are distinguishable it means that multiple reflections of the GPS signals have been occurred. At the end of the analysis we also mention some issues, associated to the received signal power, that we faced using the simplified system set up. The conclusion of the paper foster the presented experiments on board of small aircraft, as an alternative method for land characterization.

2. FUNDAMENTALS ON MEASUREMENTS OF REFLECTED GPS SIGNALS

The advantage of using GNSS signals for remote sensing purposes lies in the large number of transmitters and therefore of available data (multistatic system), guaranteeing higher spatial and temporal resolution with respect to traditional monostatic arrangements. Since 1993, several theoretical works modelling the expected signal waveform and accuracy were developed [1] and applied in many experiments [14], [15], which demonstrated the capability of monitoring the Earth's surface through this technique. Experimental campaigns were conducted on a fixed location, nearby a lake and placing the receiver on an aircraft.
Also, applications related to space-based GNSS reflectometry were studied by Hajj and Zuffada [16]. In comparison with traditional altimetry and scatterometry, about 8-10 observation can be detected at the same time using a GNSS receiver placed on board a LEO (Low Earth Orbit) satellite. Furthermore, the on-going development of the Galileo constellation will enlarge the number of offered GNSS signals, improving consequently the resolution in time and space of the remotely sensed observables.
The detection of the GNSS scattered radiation (GNSS transmitter, GNSS receiver, reflection surface) is modelled through bistatic radar geometry. The receiver must be configured to acquire the GNSS signal reflected-off the Earth and, at the same time, a direct GNSS signal with the same PRN code of the reflected. At least two antennas are required: a LHCP in charge of receiving the GNSS signals reflected-off; a skywards RHCP antenna to easily track the signal arriving from the GNSS satellites.
The GNSS reflected signal shows many differences with respect to the direct in its delay and Doppler shift, polarization change and power strength decrease. The direct and reflected signals collected by the reflectometry receiver cannot be immediately compared, since it has to be processed to get their cross-correlations with their relative GNSS local code replica [5]. Some of the operations involved to process the signals are well known steps in GNSS receivers for positioning: the acquisition and separation of the signals in space transmitted by the satellite, the tracking of the received signal through the accurate estimate of its time of

arrival and its Doppler shift. For the direct signal the delay and Doppler search interval are chosen like in positioning applications; while, for the reflected the delay is chosen looking at the delay experienced by the reflection coming from the specular reflection point and the Doppler search interval depends on the antenna footprint and the receiver velocity.
Generally speaking, the interaction between the GNSS L-band electromagnetic source and Earth's surface is unfolded exploiting two parameters: the surface scattering coefficient and the reflecting medium dielectric constant. From those, the surface geophysical characteristics are retrieved. Referring to sea-state monitoring [17], sea surface winds can be determined helping in the identification of adverse meteorological conditions far from coastal zones. Also, improvements in characterizing the interaction between the Earth's surface and the atmosphere can be made determining the soil moisture content.
On the other hand, the delay measured on the reflected and direct signal transmitted by the same GNSS satellite is exploitable to determine the SWH (Significant Wave Height) and the MSH (Mean Sea Height), giving sea altimetry measurements. The same concept can be applied to monitor sea-ice, investigating the topographic changes of the artic and antartic regions for the improvement of polar climatology knowledge.

3. DESCRIPTION OF PRACTICAL TESTS

Recent works demonstrated that software receivers facilitate the measure of GPS reflected signals. In PC-based software receivers the digital samples at the output of the RF front end are completely processed with software routines, running on a general purpose microprocessor. In remote sensing applications based on GPS, the objective consists in the Earth's surface characterization, rather than positioning.
In [9] Esterhuizen designed a device specific for GPS bistatic radar. The final module features limited size and power and is suitable for small platforms, such as Unmanned Aerial Vehicles (UAVs) and Remote Control (RC) airplanes. The designed device uses a common clock and a USB bridge to move the samples to a single board computer, as sketched in Fig. 3.1. The samples are saved to disk and then processed off line with a software receiver.

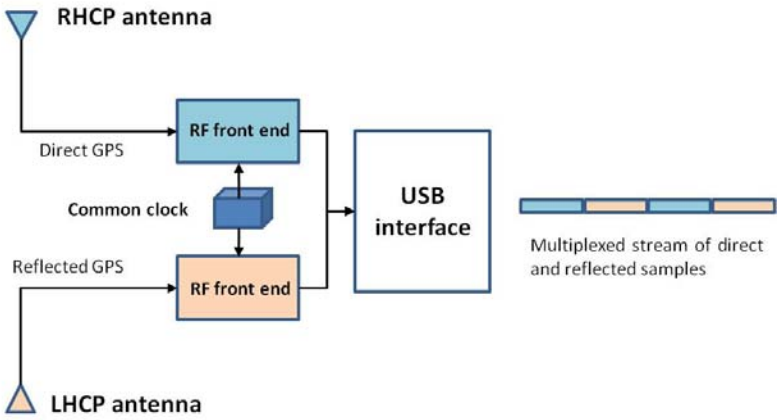

Fig 3.1: Block diagram of a classical approach for the reception of GPS direct and reflected signals

With this approach, there is a multiplexed stream of direct and reflected samples. The direct and reflected signals can be easily processed separately (without losing synchronization) but the method requires a common clock for the two RF channels and a custom design of the RF part.
In our experiment, we used a different approach, still based on the use of a software receiver.

As shown in Fig. 3.2, we combined the RF signal received from a RHCP antenna oriented skyward and that received with a LHCP antenna pointing the Earth. The combined RF signal was sent to a low cost, commercial front end, that converted the signal in digital format. We had a common stream of samples for both direct and reflected signals. Although the design of the RF part is trivial, ad hoc algorithms must be implemented in the software receiver for the detection and analysis of the reflected signals, since they appear mixed with the direct ones.

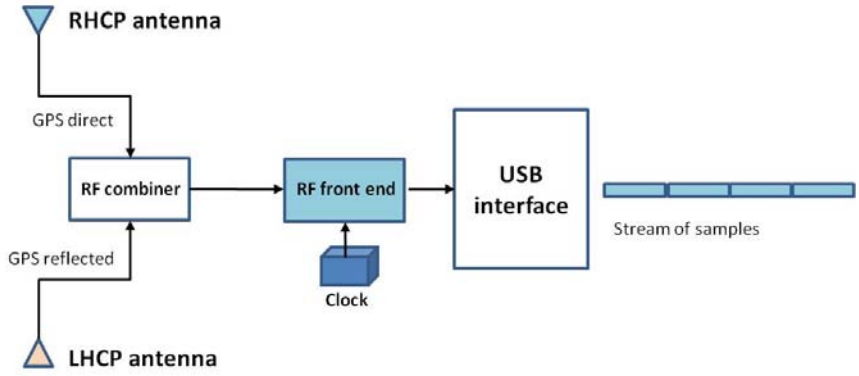

Fig. 3.2: Block diagram of a simplified front end, using 1 single RF channel, for the reception of GPS direct and reflected signals

The raw samples at the front end output were collected with N-Gene, which is a GPS/Galileo software receiver designed at the NavSAS Lab [6]. We used a dual polarization L1/L2 GPS antenna [10] for the reception of reflected signals. With this set up we performed several data collections in a static position, on a high cliff facing the Mediterranean sea, with the objective of assessing the capability of our system to acquire and track the signals reflected by the sea surface. This is the fundamental step for remote sensing GPS signal processing.

4. POST PROCESSING ANALYSIS

The object of this section is to examine the differences between the processing of direct and reflected GPS signals. The analysis has been carried out by post-processing a data campaign performed in Cala Gonone (Sardinia) on the 29th of December 2010. This location is characterized by high and vertical cliffs that make possible the acquisition of sea-reflected signals. Fig.4.1 shows an image of the cliff.

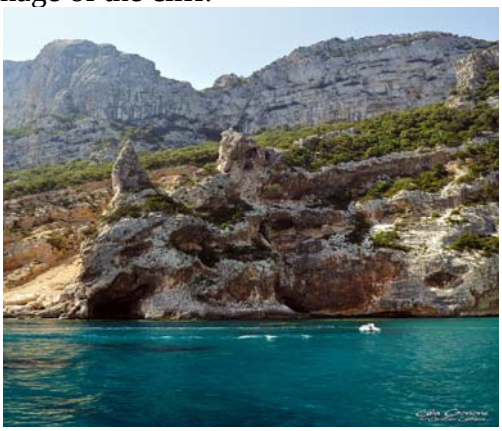

Fig.4.1: Sea cliff in Cala Gonone (Sardinia).

The main lobe of the LHCP antenna pointed seawards in order to receive only the reflected signals, while the RHCP antenna was in charge of receiving the LOS signals.

A skyplot of the GPS satellites visible by the two antennas at the time of data collection is shown in Fig.4.2. As we can see, only satellites PRN 16, 22 and 30 present a reflected component that could be detected by the LH antenna. Considering the azimuth and elevation of these three satellites, we determined the coordinates where the reflections could take place at the time of th data collection [1]. Fig.4.3 shows a map of the estimated specular reflection points.

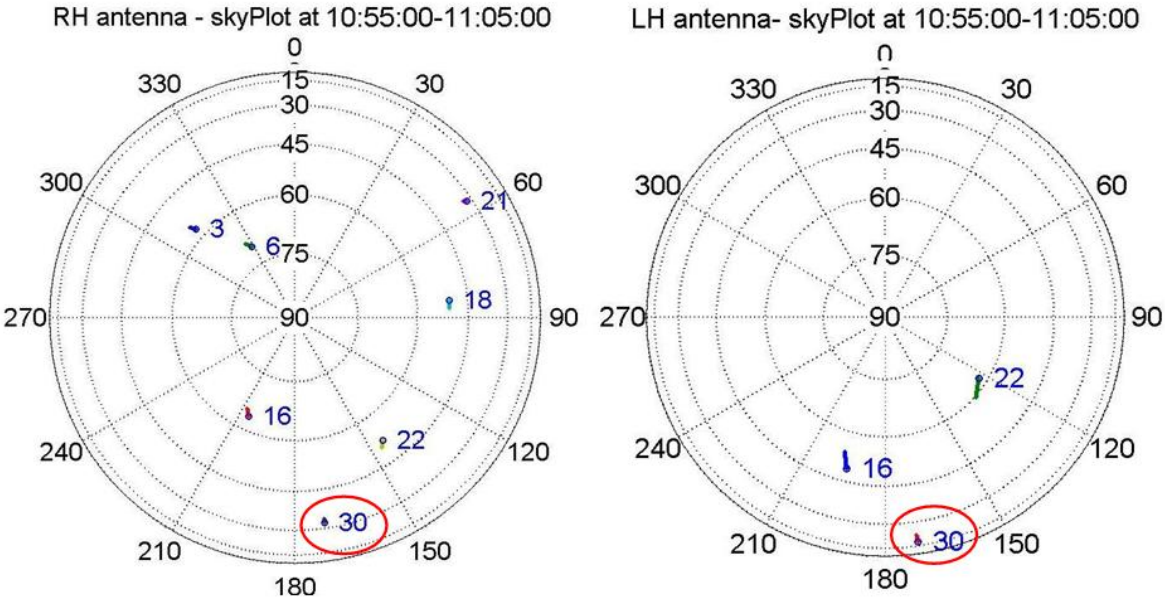

Fig.4.2: Skyplot of the satellites acquired by the RHCP and LHCP antennas.



Fig.4.3: Map of the specular points.

Only the satellite with PRN 30 had a specular point on the sea surface, whereas the specular points corresponding to the reflected PRNs 16 and 22 fell along the coast, tens meters away from the LHCP antenna. In this case, the reflected signals would have been seen by the receiver as multipath with a delay shorter than 1 chip, thus distorting the correlation peak of the direct signal. We focused only on PRN 30, since in this case the reflected signal had a delay longer than 1 chip respect to the direct and was therefore easily detectable.

First, we acquired the LOS and the reflected signals separately (connecting the RHCP and disconnecting the LH antenna and vice-versa), and we compared the processing on the two signals. Finally we collected and processed a data set with both the direct and reflect signals (connecting both the antennas to the RF combiner of Fig. 3.2) enclosed in the same stream of samples at the output of the commercial front end.

A. ANALYSIS OF THE DIRECT SIGNAL

The stream of raw samples collected with the RHCP antenna was processed by an acquisition stage for the satellite with PRN 30. The result is plotted in Fig. 4.4a, which shows the corresponding Cross Ambiguity Function (CAF). As expected, PRN 30 was detected, since the correlation peak clearly rises above the noise floor at a specific code phase offset and Doppler delay.

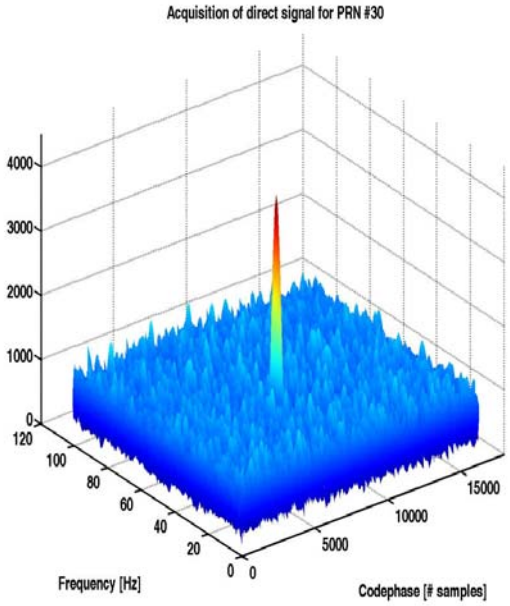

(a)
Acquisition of the direct signal for PRN #30.

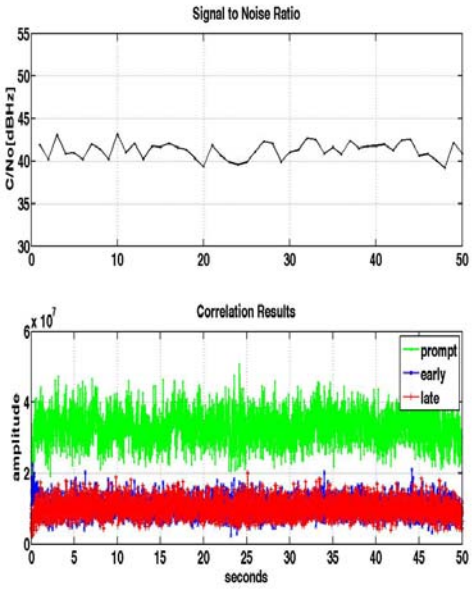

(b)
Tracking output and estimated CNo of the direct signal for PRN #30.

Fig.4.4: Acquisition and tracking results for a direct GPS signal (PRN #30)

The acquired GPS signal was then processed by tracking loops. The output of the tracking is shown in Fig. 4.4b. In case of direct signal only, the absolute value of the prompt correlation (green line) stays always above the early and late correlators. The signal power can be considered constant over 50 seconds of tracking, since no fluctuations are observed. This is also confirmed by the estimated Carrier to Noise (C\No), that slightly varies around 43 dBHz.

B. ANALYSIS OF THE REFLECTED SIGNAL

The second test consisted in processing the reflected signal captured by the LHCP antenna. In particular we focused on the acquisition of the PRN 30, which was successfully acquired as demonstrated by the CAF shown in Fig.4.5a. Comparing the acquisition of the direct and reflected signals for PRN 30, one can note how the correlation peak of the reflected signal seems higher than the one corresponding to the direct signal. This can appear odd, but can be explained considering that the main lobe of the LHCP was pointed to the specular reflection

point over the sea. In addition, the LHCP antenna used a Low Noise Amplifier (LNA) with a higher gain than the RHCP antenna. Therefore, with this set up, the reflected component during the signal acquisition resulted stronger than the LOS.

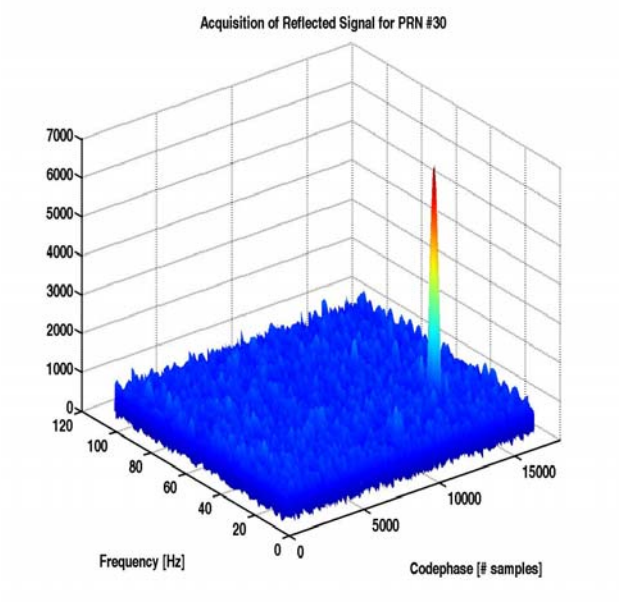

(a)
Acquisition of the reflected signal for PRN #30.

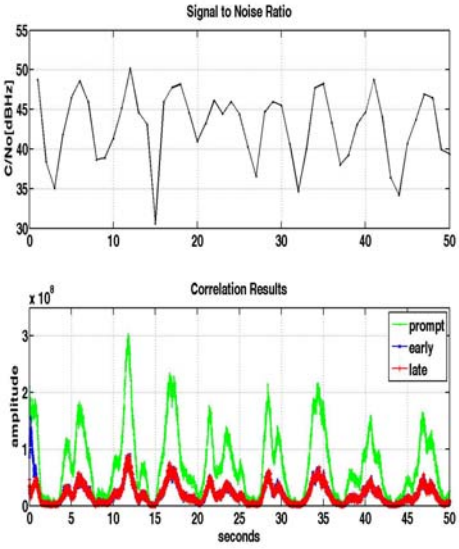

(b)
Tracking output and estimated CNo of the reflected signal for PRN #30.

Fig.4.5: Acquisition and tracking results for a reflected GPS signal (PRN #30)

If we analyze the performance of the tracking, it is clear how the prompt correlation presents a fluctuating trend in contrast with the case of the LOS signal. We can observe how the amplitude of the prompt varies over time. These variations are likely due to reflections on the sea surface that reduces the power of received signal. Such signal power fluctuations seem having a periodic nature, but the reason is still under investigation.
The estimated C/No is also affected by variations that oscillate from 30 to almost 50 dbHz. However, it is important to remark that when the power of the reflected signal is low, the tracking loop has always kept working and we have not experienced cases of drop of the lock condition.

C. ANALYSIS OF COMBINED DIRECT & REFLECTED SIGNALS

Finally we processed the RF combined signal (see Section 3 for details). On the basis of the results showed above, we performed the signal acquisition until the reflected signal component had a signal power strong enough to be detected. Results of the acquisition are plotted in Fig.4.6a. As it stands clear from Fig.4.6a two different peaks can be observed in correspondence of the same frequency bin and with a code phase delay of few samples between each others. Concerning the signal tracking, during post-processing analysis, we used additional correlators, 1 sample spaced from -6 to 6 chips delay, to have a better image of the correlation peak due to reflections. The correlation process was computed integrating over 1ms the incoming signal of the tracking stage.

From Fig.4.6b we note the correlation peaks corresponding to the direct (which is centred on the origin of the x-axis) and reflected signals. In the case reported in Fig.4.6b, the amplitude of the reflected signal is approximately half of the direct one, which arrives at the receiver 20

samples ahead. The measure of the reflected signal power (i.e. amplitude) with respect to the LOS is fundamental for the characterization of the reflecting medium, while the measure of the relative delay can be used to estimate the distance between the reflecting surface and the receiver. This last can be leveraged in passive altimetry systems.

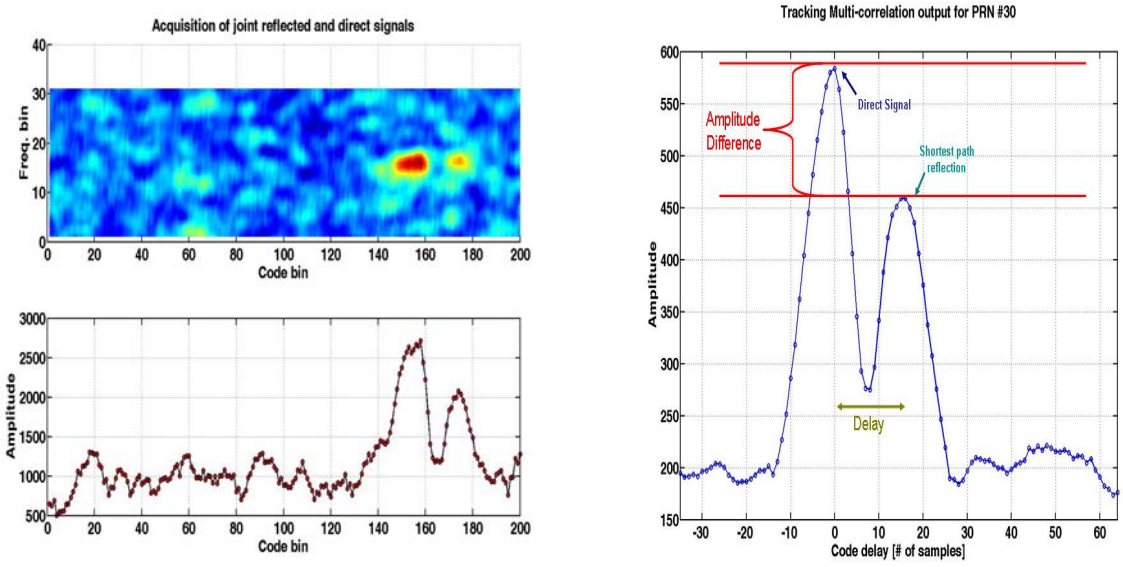

(a)
Acquisition of both the reflected and direct signal for PRN #30.

(b)
Multi correlator output for PRN #30

Fig.4.6: Acquisition and multi-correlators tracking results for combined reflected and direct GPS signal (PRN #30)

5. OPEN ISSUES

In Section 4 we have shown the post-processing results of a direct, reflected and combined RF GPS signals. Even if in all these cases we were able to acquire and track the signals, we had to face different issues that made the design of the signal processing algorithms harder than expected.

First of all we noted that in case of combined RF signals, using one single front end channel, when the power of direct (reflected) signal was much higher than the other component, the detection of the weaker signal was critical and often unsuccessful. This problem is an example of a near-far condition, in which a strong signal captures a receiver making it impossible for the receiver to detect a low signal. The use of two separate RF channels as depicted in Fig. 3.1, solves this problem, but requires a common sampling clock and a custom design of the RF part.

An alternative method would be the use of a single channel RF front end, but with a high number of bits per sample. A multi-level quantization allows for the implementation of cancellation techniques that mitigate the near-far effect and ease the detection of weak signals. Unfortunately, the front end we used in the experiment is a low cost device that represents each sample over one single bit. For the next tests, we planned the use of a multibits, single channel RF front end, combined with cancellation algorithms in the post processing analysis.

6. CONCLUSIONS

In this paper we have shown how it is possible to detect and track direct and sea-reflected

GPS signals, using a low cost front end and a proper post-processing analysis. A different trend in the tracking stage has been observed in the case of a direct or reflected GPS signal. In fact, the prompt correlation of the LOS keeps steady, without significant variations over time. On the contrary, reflected signals present periodical fluctuations in the prompt correlator output, due to variations of the incoming signal power received at the LHCP antenna. The measure of such variations as well as the delay of the reflected signal is fundamental to determine some characteristics of the sea surface.

Future works will consist in an improvement of the experimental set up, in order to overcome the limits we faced during the experiments and in the post-processing analysis. A multibits front end will allows for a better representation of the combined RF signal (i.e.: direct plus reflected), enabling the use of cancellation techniques to mitigate the near-far effect and enhance the signal acquisition sensitivity. In a future scenario the two RHCP and LHCP antennas will be mounted on an airborne and the experiment will be run in a more suitable condition for remote sensing purposes.

REFERENCES

[1] M. Martin-Neira, “A passive reflectometry and interferometry system (PARIS): Application to ocean altimetry,” ESA J., vol. 17, pp. 331–355, 1993.

[2] K. D. Anderson, “A GPS tide gauge,” GPS World Showcase, vol. 6, pp.44–48, Aug. 1995.

[3] M. Armatys, D. Masters, A. Komjathy, P. Axelrad, and J. L. Garrison, “Exploiting GPS as a new oceanographic remote sensing tool”, 3rd ed. Proceedings of the Institute of Navigations National Technical Meeting, 2001, Long Beach, California, 2001.

[4] S. Eterhuizen, D. Masters, D. M. Akos, and E. Vinande, “Experimental characterization of land-reflected GPS signals”, Proceedings of the Institute of Navigations ION GNSS-2005, Long Beach, California, September, 2005.

[5] T. Lindgren, E. Vinande, D. Akos, D. Masters and P. Axelrad, "Measurement of backscattered GPS signals",Proceedings of IEEE/ION PLANS Conference, pp. 664-669, 2006.

[6] M. Fantino, A. Molino, and M. Nicola, “N–Gene GNSS receiver: Benefits of software radio in navigation,” in Proceedings of the European Navigation Conference - Global Navigation Satellite Systems (ENCGNSS), Naples, Italy, May 2009.

[7] A. Molino, M. Nicola, M. Pini, M. Fantino,“N-Gene GNSS software receiver for acquisition and tracking algorithms validation,” in 17th European Signal Processing Conference, EUSIPCO, 2009.

[8] M. Cucca, R. Notarpietro, M. Fantino, G.Perona, “Reflected GNSS Signals received on Unmanned Aerial Vehicle platform: a feasibility study”, in Proceedings of the 2010 Gold Remote Sensing Conference, 2010 Gold Remote Sensing Conference, Livorno, Italy April 29-30,2010.

[9] S. Esterhuizen, *The Design, Construction, and Testing of a Modular GPS Bistatic Radar Software Receiver for Small Platforms*, Master of Science Thesis, Department of Electrical and Computer Engineering, 2006

[10] http://www.antcom.com

[11] D. Masters, D. Akos, S. Esterhuizen, and E. Vinande. “Integration of GNSS Bistatic Radar Ranging into an Aircraft Terrain Awareness and Warning System,” *in the proceedings. of* Institute of Navigation GNSS 2005 conference, 2005, Long Beach, USA

[12] D. Masters, P. Axelrad, V. Zavorotny, S. J. Katzberg, and F. Lalezari, “A Passive GPS Bistatic Radar Altimeter for Aircraft Navigation,” *in the proceedings. of* Insitute of Navigation GPS 2001 conference

[13] Dallas Masters “Surface Remote Sensing Applications of GNSS Bistatic Radar: Soil Moisture and Aircraft Altimetry” Ph D thesis, University of Colorado at Boulder, 2004.

[14] M. Martin-Neira, M. Caparrini, J. Font-Rossello, S. Lannelongue, C. S. Vallmitjana, “The PARIS concept: an experimental demonstration of sea surface altimetry using GPS reflected signals”, *IEEE Transactions on Geoscience and Remote Sensing*, 39, 142-150, 2001

[15] Elfouhaily, T.M, Thompson, D.R, Linstrom, L.A, “Delay-Doppler Analysis of Bistatically Reflected signals from the Ocean Surface: Theory and Application”, *IEEE Transactions on Geoscience and Remote Sensing*, 40, 560-573, 2002

[16] Hajj, G., Zuffada, C., “Theoretical description of a bistatic system for ocean altimetry using the GPS signal”, *Radio Science*, 38, 10.1-10.19, 2003

[17] M. Armatys, D. Masters, A. Komjathy, P. Axelrad, and J. L. Garrison, “Exploiting GPS as a new oceanographic remote sensing tool”, 3rd ed. Proceedings of the Institute of Navigations National Technical Meeting, 2001, Long Beach, California, 2001.