POLITECNICO DI TORINO
Repository ISTITUZIONALE

Thermal diffusivity of amorphous plastic materials

Original
Thermal diffusivity of amorphous plastic materials / Sparavigna, A.C., Omini, M., Pasquarelli, A., Strigazzi, A.. - In: HIGH TEMPERATURES-HIGH PRESSURES. - ISSN 0018-1544. - STAMPA. - 24:2(1992), pp. 175-178.

Availability:
This version is available at: 11583/1405997 since:

Publisher:
Pion, London

Published
DOI:

Terms of use:

This article is made available under terms and conditions as specified in the corresponding bibliographic description in the repository

Publisher copyright

(Article begins on next page)

29 November 2026

Thermal diffusivity of amorphous plastic materials

Amelia Sparavigna, Marco Omini, Aldo Pasquarelli, Alfredo Strigazzi
Dipartimento di Fisica, Politecnico di Torino INFM and CISM, Unità di Torino, C.so Duca Abruzzi 24, I-10129 Torino
Presented at the 12th European Conference on Thermophysical Properties, Vienna, Austria, 24–28 September 1990

Abstract. The paper presents thermal diffusivity data on amorphous plastic materials, obtained by means of a method previously developed by the authors. This method ensures high sensitivity (<1%) and good reproducibility(<3%).

Measuring the thermal diffusivity of materials of low thermal conductivity, with high sensitivity and accuracy, is an important task not only for practical reasons but also for theoretical reasons. In fact, it is important to identify the physical nature of the low-temperature excitations in amorphous materials (Zeller and Pohl 1971, Elliot 1990) as well as in new ceramic materials (Sparn et al 1988). Good measurements of thermal diffusivity are useful to this purpose, since they give information on the scattering mechanisms, via the thermal conductivity, and on the density of states, via the heat capacity.

In this paper, we present measurements on a Plexiglass sample near room temperature, obtained by a new method which is in principle applicable over a wide range of temperature. The thermal diffusivity, α, is measured by recording the thermal expansion of a vertical cylindrical sample which is heated at its base (Omini et al 1990a).

This method is characterised by a high sensitivity (<1%) due to the use of a capacitive system to detect the expansion of the sample. Moreover, the diffusivity is obtained with high accuracy as it is possible to eliminate the sources of error that are due to radiative heat exchanges through the surface of the specimen and conduction through the mechanical support and the thermocouple leads.

The measurement apparatus is shown in figure 1. The sample is surrounded by a guard G of the same material as the sample, which reduces heat losses from the lateral surface. The radial thickness of the thermal guard ($d \sim 1$ cm) is chosen in order to prevent, during the measurement (of duration of about 80 s), radiation from the external

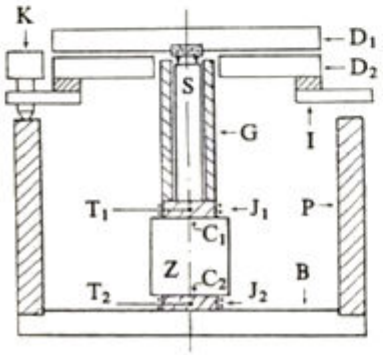

Figure 1. Experimental set-up for thermal diffusivity measurements (the sample length is $l = 10$ cm).

surface affecting the temperature condition at the inner surface, which consequently is practically the same as the temperature of the sample at the same axial coordinate. In fact the diffusion characteristic time is $\tau \simeq d^2/(\pi^2\alpha)$, which gives $\tau \sim 100$ s for $\alpha \sim 10^{-7}$ m^2 s^{-1}. Hence the thermal flux is axial, provided both the specimen and the guard are made of amorphous material and are without internal stresses. This condition is satisfied by means of a previous annealing process, performed with the aim of avoiding the presence of any dislocations, thus also preventing any pin effect (Luzuriaga 1987).

The heat source is the copper disc C_1 surrounded by a resistive coil J_1. A thermocouple T_1, inserted in C_1, records the temperature $\theta_1(t)$ of the source; this is the only information required about the heat source in our measurement method.

The thermal expansion of the specimen is detected by a capacitive system composed of two fused silica discs (diameter 10 cm), D_1 and D_2, coated with a conductive film of tin oxide. D_2 is supported by an Invar ring, I, whose position is adjustable on the fused silica pillars, P, and the base, B, by means of three levelling screws, K. The movement of D_1 owing to the thermal expansion of the sample gives rise to a capacitance change which is detected by an impedance bridge connected to an Ithaco lock-in amplifier. The system does not provide a direct measurement of the thermal expansion Δ of the sample but a voltage V that is a function of the initial gap and of the angle between the plates D_1 and D_2 and, moreover, is dependent on the parameters of the impedance bridge. It is therefore necessary to calibrate the apparatus, for any mounting of the two discs. In order to do this, the voltage V is compared to the thermal expansion of a calibration sample.

Placed on the fused silica base there is another copper disc, C_2, which supports a cylinder, Z, of Zerodur [a glass ceramic with a very low thermal expansion coefficient ($< 0.5 \times 10^{-7}$ K^{-1})]. C_2 can be heated by a coil, J_2, and its temperature is measured by a thermocouple, T_2, inserted into it. By recording the thermocouple signal and the voltage V in a heating experiment concerning C_2 (figure 2a), it is possible to calibrate the capacitive signal (Omini et al 1990b).

The cylinder Z separates the part of the apparatus used to calibrate the capacitive signal from the one used to measure the diffusivity of the sample. After the system has again reached its thermal equilibrium, ie the same conditions as before the calibration experiment, the current is switched on in J_1, and $\theta_1(t)$ and $V(t)$ are recorded (in figure 2b we show these signals for an experiment on a Plexiglass sample). By a minimisation procedure shown elsewhere (Omini et al 1990a) it is possible to obtain the diffusivity of the specimen. In fact, as described in a previous paper (Omini et al 1990a), both thermal diffusivity α and reduced thermal resistance γ at the sample–source interface can be

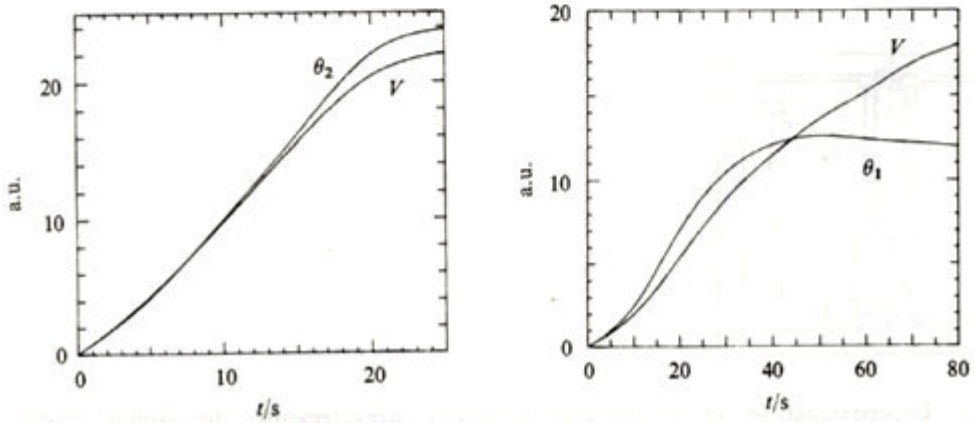

Figure 2. Time behaviour of (a) $\theta_2(t)$ and V in the calibration experiment; (b) $\theta_1(t)$ and V in the experiment performed on Plexiglass. The scale of the y axis is arbitrary.

calculated by minimisation of the square sum:

$$\delta = \sum_{\text{time}} (\Delta_{\text{th}} - \Delta_{\text{exp}})^2, \tag{1}$$

In (1) the theoretical expansion Δ_{th} is given by

$$\Delta_{\text{th}} = \text{f}(\alpha, \gamma, \theta_1) + (\beta_1/\beta)(b/l)\theta_1, \tag{2}$$

where f is a convenient function of the unknown parameters α, γ and of the source temperature θ_1, β_1/β is the ratio between the thermal expansion coefficients of copper and the sample material, and b/l is the ratio between the axial lengths of the copper disc and the sample (in our case $b = 0.6$ cm, $l = 10$ cm). Moreover, the experimental thermal expansion Δ_{exp} is detected as a voltage signal V; by taking into account also the nonlinearity contribution we have:

$$\Delta_{\text{exp}} = \lambda V + \mu V^2. \tag{3}$$

The square sum (1) is minimised numerically with respect to α and γ, whereas λ and μ are measured by the calibration procedure cited above (Omini et al 1990b). The repeatibility of the measurement of α is within 3%.

The measured data of thermal diffusivity of some plastic materials at room temperature ($\sim$18 °C) are reported in table 1. Table 2 shows the values of the diffusivity of Plexiglass at different temperatures. The measurements have been performed in a vacuum furnace, with the temperature controlled by an electronic device.

The maximum temperature achieved during measurement was 80 °C, just below the Plexiglass characteristic transition temperature, in order to avoid thermal stresses in the sample. To deduce the values of α, it is necessary to know the values of the thermal expansion coefficient in the temperature range under study: the values of α of table 2 have been obtained using the values of thermal expansion reported by Touloukian et al (1973). It is possible to use the dilatometric setup to obtain the relative expansion coefficient β/β_2, where β is the thermal expansion coefficient of the specimen S and β_2 that of the calibration sample C_2. In the experimental arrangement used to measure the relative expansion coefficient (see figure 3), the calibration sample is the copper disc C_2. The sample S is placed on the Zerodur cylinder Z and is surrounded by the resistive coil J_1. The temperature is recorded by the thermocouple T_1. Placed on the sample, there is another Zerodur cylinder $\hat{Z}$. To be sure that the temperature in the sample is uniform, it is necessary to perform a slow heating of the sample itself.

Table 1. Values of the thermal diffusivity, α, obtained by the dilatometric technique for three different plastic materials at room temperature.

Sample	$\alpha/10^{-7}$ m^2 s^{-1}
Plexiglass	0.95
Teflon	0.93
PVC	1.75

Table 2. Values of the thermal diffusivity, α, for Plexiglass, at different temperatures, θ.

θ /°C	$\alpha/10^{-7}$ m^2 s^{-1}
20	0.95
40	0.93
60	0.90
80	0.89

At room temperature, the value of the ratio $\xi = \beta/\beta_2$ for a Plexiglass specimen turns out to be 4.14 and is comparable with the ratio of values found by Touloukian et al (1973) and Kroeger (1977). The repeatibility of the value obtained for ξ, is better than 0.5%. The uncertainty on ξ affects the measurement of α, but in order to have an uncertainty on α of the order of $\sim 3\%$ (that is of the order of the repeatibility) ξ has to be known within 1%. With our dilatometric method, we are well below this limit.

To use the dilatometric method for diffusivity determination at high temperature it is necessary to substitute Zerodur with fused silica. Work is in progress to extend the dilatometric techniques to the high temperature region. In this range of temperature, thermal radiation losses from the sample surface are in principle not negligible. The dilatometric technique, with its use of the thermal guard, therefore appears to be a particularly suitable and promising method.

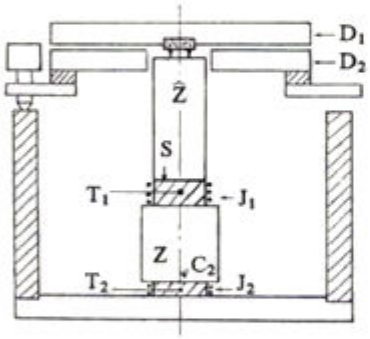

Figure 3. Experimental set-up for thermal expansion measurement.

References

Elliot S R, 1990 *Physics of Amorphous Materials* (Harlow: Longman)

Kroeger F R, Swenson C A, 1977 *J. Appl. Phys.* **48** 853–864

Luzuriaga J, 1987 *Phys. Rev. B* **35** 3625–3629

Omini M, Sparavigna A, Strigazzi A, 1990a *Meas. Sci. Technol.* **1** 166–171

Omini M, Sparavigna A, Strigazzi A, 1990b *Meas. Sci. Technol.* **1** 1228–1231

Sparn G, Schiebeling W, Lang M, Held R, Gottwick U, Steglich F, Rietschel H, 1988 *Physica C* **153–155**, 1010–1011

Touloukian Y S, Kirby R K, Taylor R E, Lee T Y R (Eds), 1973 *Thermal Expansion: Nonmetallic Solids* volume 13 of *Thermophysical Properties of Matter* Eds Y S Touloukian, C Y Ho (New York: Plenum) pp 1470–1474

Zeller R C, Pohl R O, 1971 *Phys. Rev. B* **4** 2029–2041